craft cabinetry

BUILD YOUR PERFECT KITCHEN WITH US!



www.craftcabinetry.com

(267) 899-1888 | 5660 Rising Sun Ave, Philadelphia, PA 19120

09.22.2026

craft cabinetry

04	About Us
05	Contact Information
06	Our Products
13	Cabinet Door Profile
14	Cabinet Construction Specifications
20	Wood Characteristics
21	Understanding Wood And Humidity
22	Points To Consider
23	Craft Finish
24	Cabinetry Order Form
25	Kitchen Measuring Guide
30	Dealer Agreement
35	Dealer Product & Warranty Awareness Form
36	New Account
36	Disclaimer
38	Pickup Information
40	Exceptional Lead Times
41	Delivery & Storage Fees
42	Delivery Process
43	Return/Cancellation
45	Warranty
47	Product Catalog

ABOUT CRAFT CABINETRY

Thank you for choosing Craft Cabinetry!

At Craft Cabinetry, we believe that the kitchen is the heart of the home. Our mission is to create kitchen cabinets that are fashion-forward, stylish, and feature high-quality components, all while offering exceptional value. Every aspect of our products, from design and engineering to manufacturing, is carefully considered.

Since our founding in 2018, we have been dedicated to introducing innovative designs, top-quality products, and the best customer service in the kitchen industry. We specialize in kitchen cabinets, bathroom vanities, and other cabinetry solutions, all crafted from sustainably harvested, solid wood logs carefully selected by our direct suppliers.

Our cabinetry features superior construction specifications, elevated furniture-grade finishes, and modern design flourishes.

At Craft Cabinetry, every product is assembled by our experienced craftsmen and thoroughly inspected by our professional team before being delivered to our clients. We are proud to offer premium cabinets at unbeatable prices and with lightning-fast lead times. Our products are shipped nationwide as Ready-to-Assemble (RTA) or assembled to select locations.

www.craftcabinetry.com

(267) 899-1888 | 5660 Rising Sun Ave, Philadelphia, PA 19120

CONTACT INFORMATION

Pennsylvania Warehouse

Customer Service & Warranty Assistance

Order Inquiries, Revisions, Production Inquiries, General Questions

(267) 899-1888 | orders@craftcabinetry.com

Shipping & Scheduling

Delivery Inquiries, Scheduling

(267) 899-1888 | shipping@craftcabinetry.com

New Orders

Submit Orders, Warranty Claims

(267) 715-1701 | sales@craftcabinetry.com

Accounting

Invoices, Payments

(267) 899-1888 | ap@craftcabinetry.com

Design

Design Support

(267) 899-1888 | design@craftcabinetry.com

New Wholesale Accounts

Marketing Support

(267) 715-1701 | sales@craftcabinetry.com

Hours of Operation

Office: Monday-Friday: 9am-5pm

Warehouse: Monday-Friday: 8am-5pm

OUR PRODUCTS

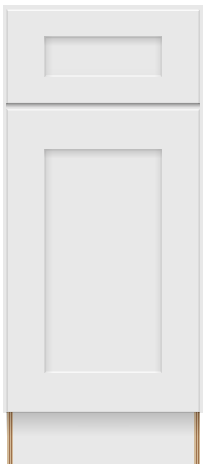

Pure White

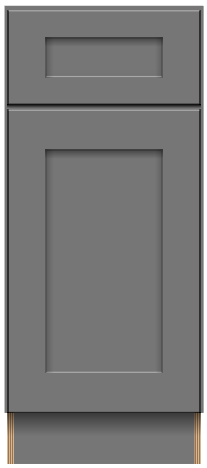

Modern Gray



Midnight

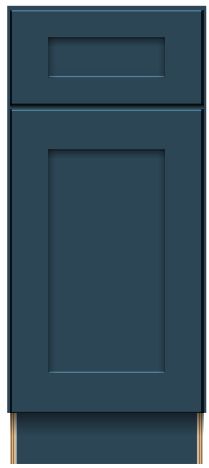

Navy Shaker

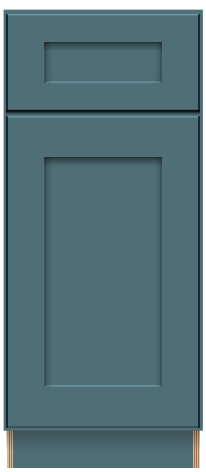

Aqua*



Rift Oak



Stain Gray

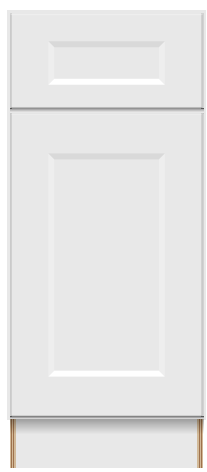

Berkley Pure White

* - Aqua cabinetry line only has base cabinets, fillers and hoods.

www.craftcabinetry.com | (267) 899-1888 | 5660 Rising Sun Ave, Philadelphia, PA 19120





PIURE WHITE





BERKLEY WHITE RECESSED



MODERN GRAY







NAVY





MIDNIGHT





RIFT OAK





AQUA



STAIN GRAY





CRAFT® CABINETRY SPECIFICATIONS

SHAKER STYLE

CABINET DOOR PROFILE



3/4" Birch Wood Full Overlay Door

1/4" MDF Center Panel

www.craftcabinetry.com | (267) 899-1888 | 5660 Rising Sun Ave, Philadelphia, PA 19120



Dovetail Joints

Front & Back with Added Metal Corner Brackets

Our cabinet box is framed in 3/4" Birch wood with dovetail joints, signifying quality and resilience. The 1/2" plywood bottom and adjustable shelves, edge-banded in a natural wood veneer finish, add to the structural integrity and aesthetic appeal. Metal brackets are incorporated for additional strength.

Glide Effortlessly

Soft Close Under-mount Full Extension Runners

The drawers feature 5-piece Birch wood fronts, harmonizing beautifully with the overall design. Constructed with a 5/8" solid wood drawer box and a robust 3/8" plywood bottom, these drawers are built to last.



craft cabinetry



Full Extension

Our Drawers Runners Slide Out All The Way!

Easy reach full extension runners with soft close and simple adjustment. Wide drawer sizes available as well as our popular microwave base cabinet.

www.craftcabinetry.com | (267) 899-1888 | 5660 Rising Sun Ave, Philadelphia, PA 19120



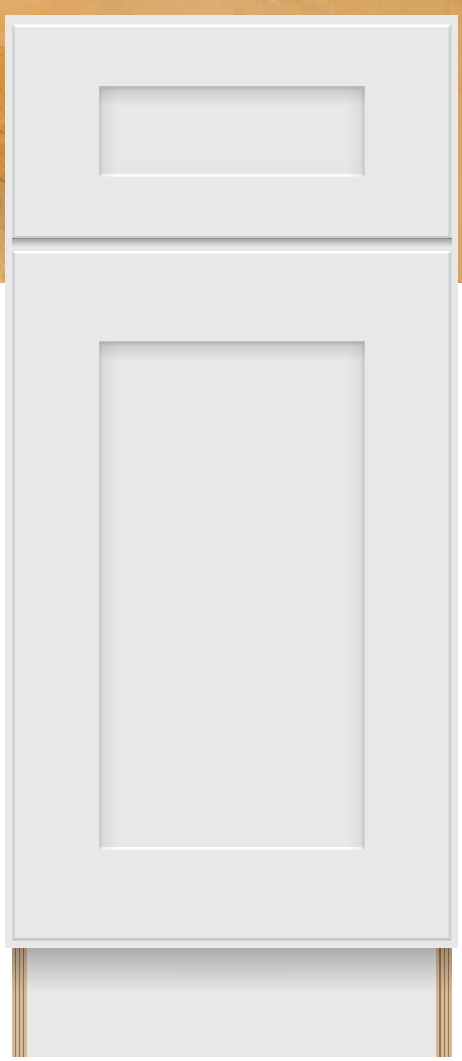

Solid Wood Cabinets

Each Piece of Lumber We Use is Truly One of a Kind

We take great pride in selecting the finest quality kiln-dried hardwoods for our products. Our lumber is dried to a precise 6-8% moisture content to ensure stability. Our commitment to quality ensures that every piece of cabinetry we create is not only beautiful but also a reflection of nature's artistry.



Hoods

Beautifully Blend Modern Design & Functionality

Craft Cabinetry offers matching hoods for each of the cabinetry collections. The decorative details featured in the trim make it a beautiful addition to traditional and transitional kitchens.

Available in all collections.

www.craftcabinetry.com | (267) 899-1888 | 5660 Rising Sun Ave, Philadelphia, PA 19120

craft cabinetry



Cabinets & Vanities

Drawer Base Cabinets & Matching Vanities Available

The drawers feature 5-piece Birch wood fronts, harmonizing beautifully with the overall design. Constructed with a 5/8" solid wood drawer box and a robust 3/8" plywood bottom, these drawers are built to last.

Available in all collections.

craft cabinetry

SHAKER STYLE
CABINET CONSTRUCTION

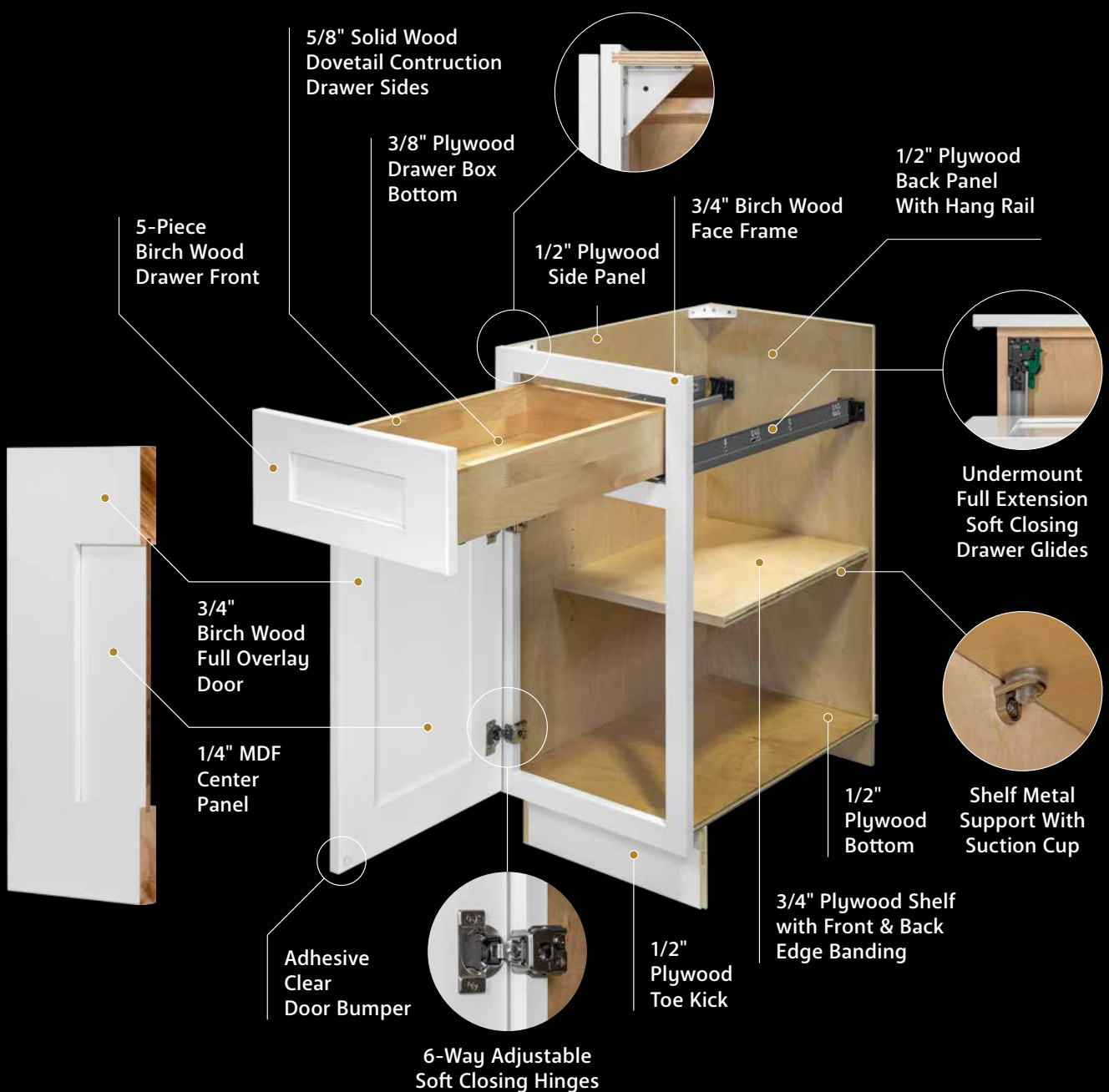

www.craftcabinetry.com



THE UNIQUE BEAUTY OF CRAFT CABINETRY

WOOD CHARACTERISTICS

At Craft Cabinetry, we recognize that wood cabinetry is as unique as a fingerprint; no two pieces are alike. Each piece of lumber and veneer we use is truly one of a kind. Soil and climatic conditions influence growth characteristics, resulting in mineral streaks, gum spots, and knots, creating striking colors and grain patterns. These natural variations give wood its distinct character and exceptional beauty.

We take great pride in selecting the finest quality kiln-dried hardwoods for our products. Our lumber is dried to a precise 6-8% moisture content to ensure stability. However, wood will expand during humid months and contract during dry seasons. Therefore, maintaining a consistent humidity level in your home is crucial. We recommend a 40-50% humidity level to keep your cabinets in perfect condition, as extremes can cause issues with the natural wood.

The best quality hardwoods have inherent characteristics that cannot be hidden by finishing. These variations result from weather, climate, soil composition, insect activity, and the unique growth patterns of each tree. These traits add to the natural beauty and charm of real wood.

At Craft Cabinetry, we embrace these qualities, knowing they add warmth and sophistication to your home. Our commitment to quality ensures that every piece of cabinetry we create is not only beautiful but also a reflection of nature's artistry.

PRODUCT SPECIFICATIONS

UNDERSTANDING WOOD AND HUMIDITY

Under normal circumstances, all Craft Cabinetry wood products contain some moisture. Similar to a sponge, wood easily exchanges moisture with the environment, even after being finished. While a finish can slow this process, finished wood still reacts to humidity changes. When humidity is high, wood absorbs moisture and expands. During low humidity, it releases moisture and contracts. Wood only changes size or shape with shifts in moisture content due to humidity. Minor humidity variations cause imperceptible dimensional responses in wood.

To prevent issues, maintain household humidity between 40-50%. Extremes above 80% or below 20% can cause problems. Wood products perform best in controlled environments, and warping issues usually result from improper site storage, installation, or use.

PRODUCT SPECIFICATIONS

POINTS TO CONSIDER

- The density of wood affects its reaction to humidity changes; dense species like pant grade hardwoods will expand or contract more than species like Cherry.
- Moisture can cause panel expansion or contraction, joint separation, bowing of the stile or rail, and expansion/contraction of the stile or rail.
- Wood products in humid climates are particularly susceptible to moisture expansion.
- Failures due to high moisture are not covered under the Craft Cabinetry warranty, especially in waterfront properties and coastal regions.
- Products in non-air-conditioned homes are also at risk; winter and vacation homes should maintain climate control year-round.
- Doors may swell and bind after installation but should revert to their original size once climate control is activated.
- Craft Cabinetry does not recommend trimming or shaving door edges, as trimmed doors are not covered under warranty.
- It is important to control humidity during storage and installation to prevent issues.
- Traditional 5-piece doors (stiles, rails, and panels) are designed to accommodate some expansion and contraction. Proper humidity management ensures reliable and beautiful cabinets.

PRODUCT SPECIFICATIONS

CRAFT FINISH

- The finish you select for your cabinets sets the overall tone of your kitchen. With Craft Cabinetry's range of quality colors and door styles, you'll find the perfect combination for your home.
- Choose from light-colored painted finishes, mid-tones, or classic dark stains.
- Light and mid-tone finishes highlight the natural beauty of the wood, while darker stains create a more formal, rich, and elegant look.
- No matter which finish you choose, the quality and attention to detail in each door will bring lasting comfort and style to your kitchen for years to come.

PAINTED FINISH

Craft Cabinetry painted doors are meticulously hand-sprayed and oven-baked, with each layer hand-sanded between coats to achieve a hard and lustrous finish. Our painted doors are then top-coated with a catalyzed conversion varnish, providing exceptional durability and easy cleaning. Due to natural moisture gain and loss, painted doors may develop hairline cracks at the joints, resulting in slight expansion and contraction. This is a normal occurrence and is not considered a defect.

STAINED FINISH

At Craft Cabinetry, doors and drawer fronts are meticulously sanded to create an exceptional surface ready for finishing. A transparent stain is then sprayed over the wood, allowing the grain to develop beautifully. Next, a protective catalyzed sealer, selected for its excellent adhesion, moisture resistance, and sealing qualities, is applied and oven-baked for durability. A tough, catalyzed conversion varnish topcoat is applied using an airless spray system and then oven-baked.

The final varnish and oven-curing system ensure that your cabinetry is well-sealed and protected from scratches, dents, and chips, offering a stunning, smooth, and durable finish that enhances the beauty of your home.

craft cabinetry

CABINETRY ORDER FORM

(267) 899-1888 | info@craftcabinetry.com

Contact Info:

Account Name	Date
Phone	E-mail

Ship To:

☐ Pick-Up ☐ Delivery ☐ Job-Site Delivery

PO#

Name	Street

City	State	Zip	Phone

Cabinetry Line

☐ Assembled ☐ RTA

SKU	QTY	SKU	QTY	SKU	QTY

General Instructions: Orders confirmed by 12:00PM will be available for pick up at our PA location 3 business days later (IE: orders confirmed by 11:00PM. Monday will be available for pick up Wednesday.) Pick-up Hours: Monday-Friday between 8:00AM-12:00PM and 1:00PM-3:30PM. Orders are non-cancellable. All orders must be paid by authorized dealer's credit card at time of order. By signing below you are authorizing Craft Cabinetry to charge your credit card. You will be notified if order(s) are not available for pick up as planned. Inspect all packages before signing your pick up ticket. **By signing your pick up ticket, you are indicating that the products you received meet specifications and no damage claims or returns will be accepted.**

Authorized Signature	Date:	Requested Delivery/Pick Up Date

KITCHEN MEASURING GUIDE

craft cabinetry

KITCHEN MEASURING GUIDE

(267) 899-1888 | design@craftcabinetry.com

What shape best describes your future kitchen?

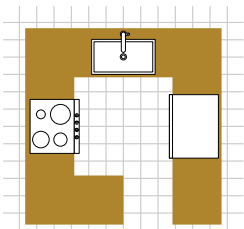

☐ G-Shape

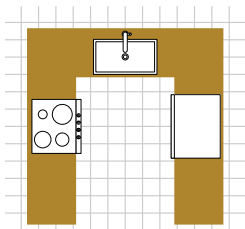

☐ U-Shape

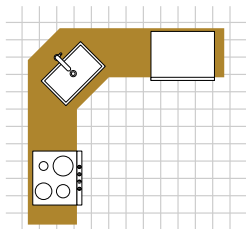

☐ L-Shape

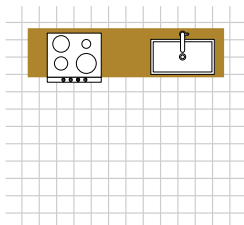

☐ Straight

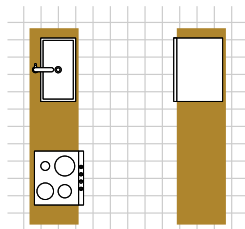

☐ Galley

Measure and write down your kitchen appliances dimensions:

				Width	Height	Depth
Sink	☐ Single	☐ Double	☐ Bar/Prep			
Dishwasher	☐ Built-in	☐ Portable				
Refridgirator	☐ Regular	☐ Counter-depth				
Wine Cooler	☐ Built-in	☐ Freestanding				
Microwave	☐ Built-in	☐ Freestanding	☐ Over Range			
Range Hood	☐ Wall-Mount	☐ Island Mount				
Oven	☐ Single	☐ Double	☐ Combo			
Cooktop	☐ Drop-in	☐ Custom				

Additional Notes:

KITCHEN MEASURING GUIDE

(267) 899-1888 | design@craftcabinetry.com

Measure and Draw Your Kitchen

Feel free to print and use grid template on the last page to draw floor and elevation plans.

Floor Plan

Draw a rough floor plan of your kitchen. Include the overall shape of the room, location of wall openings. Add exisitng kitchen layout if new kitchen design is not required.

Elevation

In addition to floor plan draw an elevation plan of every wall and specify measurements of doors and windows. Add locations of water, drain, and gas lines. If applicable add measurements of soffits.

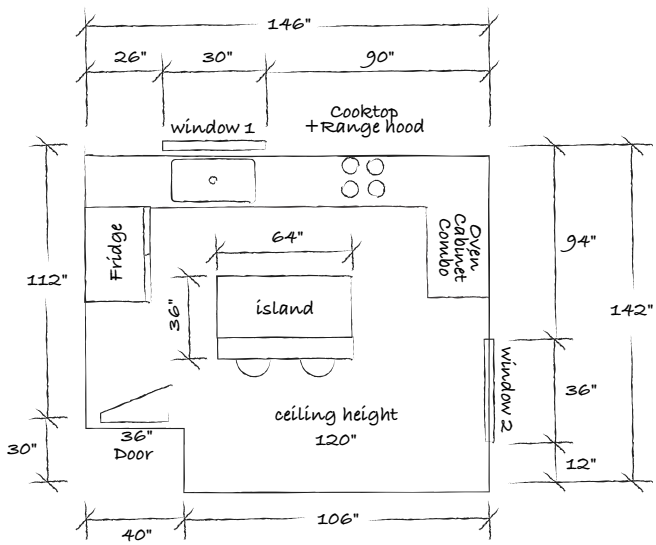

Floor Plan

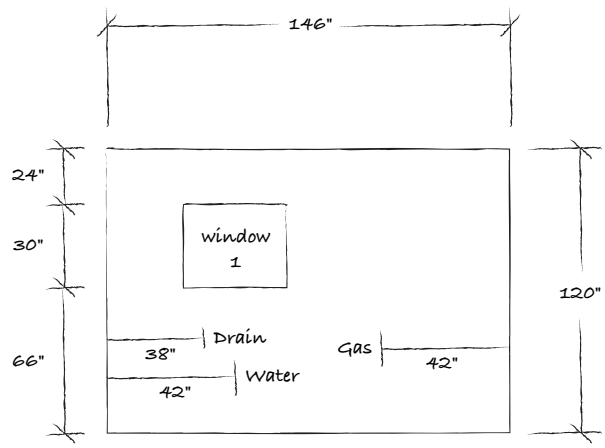

Elevation Plan 1



Send us Pictures of Your Kitchen

Please take as many pictures of the existing kitchen as possible and text us at (267) 899-1888 or e-mail to design@craftcabinetry.com.

This will enable our designers to produce a more precise and realistic 3D representation of your kitchen design.

KITCHEN MEASURING GUIDE

(267) 899-1888 | design@craftcabinetry.com

Page Title

Take pictures of the first page and all measurement pages, text them to us at (267) 899-1888 or e-mail to design@craftcabinetry.com and we would be glad to start working on your free 3D kitchen design.

Name	
City	
Phone	E-Mail

CREDIT CARD AUTHORIZATION FORM

(267) 899-1888 | info@craftcabinetry.com

I, _____ owner of the below listed credit card, authorize Craft Cabinetry to charge said credit card for the full amount due on this account, including all late charges. I hereby acknowledge and agree the purpose for providing the credit card is to secure business debt and unpaid charges that were business purpose charges. I promise not to cancel, reverse or revoke the credit card without supplying Craft Cabinetry with new information if the credit card is lost, stolen, canceled or renewed.

Authorization:

- I hereby authorize Craft Cabinetry to initiate charges to the credit card account
- I will ensure that sufficient credit is available on the card to cover my marketing expenses
- I have also read, understand and agree with all Craft Cabinetry's terms, agreements, and policies

Billing Information:

Name (As it Appears on the Card)		
Billing Address		
City	State	Zip
Last 4 Digits of Credit Card Number	☐ VISA ☐ MASTER CARD ☐ AMEX	
Expiration Date (MM/YYYY)		

This authority will remain in full force and effect until I revoke it by giving 30 days prior written notice by email sent to ap@craftcabinettry.com, Craft Cabinetry. Your completion of this authorization form helps us to protect you, our valued customer, from credit card fraud. Craft Cabinetry will keep all information entered on this form strictly confidential.

Authorized Person's Signature

Authorized Signature	Date:

craft cabinetry

DEALER AGREEMENT

(267) 899-1888 | info@craftcabinetry.com

AUTHORIZATION TO CHARGE CREDIT CARD

THIS AGREEMENT, to become effective the ___ day of___20___(hereafter called " Agreement") between Craft Cabinetry with its principal place of business at 5660 Rising Sun Ave, Philadelphia, PA 19120. (hereafter called " Company") and _____ (Dealer Name) (Indicate if Individual, Partnership or Corporation) with its principal place of business for the sale of Company products covered by this Agreement located at: _____ _____ (hereafter called "Dealer").

I. PURPOSE

This Agreement is to establish Dealer as a Dealer of Company with the non-exclusive right to sell the Company's Products, including parts and accessories (hereafter called "Products") in the trade area served by Dealer and to establish the responsibilities of the parties.

II. TERMS OF SALE

Prices and terms for Products shall be those in effect on the date the Company accepts the Dealer order. Company will have the right to change the product offering, terms and prices at any time.

III. CREDIT

The Company does not offer open account credit terms. Accepted payments methods for products and services are: credit card, wire transfer or cashier's check.

IV. WARRANTY

Company Products are sold subject only to the applicable Company standard printed warranty in effect at the time of sale and such warranty shall be in lieu of all other warranties express or implied. Dealer is not authorized to assume, on Company's behalf, any liabilities in connection with Dealer's sale of Product other than as set forth in such Company standard warranty. Dealer shall indemnify and hold Company harmless with respect to any Dealer representation beyond those in such Company warranty. COMPANY MAKES NO WARRANTY OF MERCHANTABILITY OR FITNESS FOR A PARTICULAR PURPOSE.

V. DELIVERY

Company shall not be responsible for failure to deliver products on time or to fill orders when such delay or failure results from causes beyond Company's control.

VI. RESPONSIBILITY OF DEALER. DEALER SHALL:

A. The density of the wood can affect how much or how little it reacts to changes in humidity. More dense species like pant grade hardwoods will expand or contract more than species like Cherry.

B. Effects of moisture may include panel expansion or contraction, joint separation, bowing of the stile or rail and/or expansion/contraction of the stile or rail.

C. Wood products located in humid climates are especially susceptible to expansion due to moisture.

D. Product failures due to high moisture conditions are not covered under the Craft Cabinetry warranty. Such locations would include waterfront properties and coastal regions.

E. Regardless of location, products installed in non-air conditioned homes are especially susceptible to moisture concerns. Winter and vacation homes should maintain some form of climate control even during the off-season.

F. Sometimes doors may swell and bind after installation. Upon activation of the climate control, doors should revert to their original dimension and resume normal operation. For this reason, Craft Cabinetry does not recommend trimming or shaving the door edges Trimmed doors are not covered under the Craft Cabinetry warranty. Also, care should be taken to control humidity even during storage and installation.

G. Traditional doors with 5-piece construction (stiles, rails and panels) have been engineered to allow some normal expansion and contraction of the panels.

H. Craft Cabinetry takes great care in selecting properly kiln dried woods to ensure stability in climate controlled homes. With proper attention to humidity levels (normal fluctuations are expected) your Craft Cabinetry will perform reliably and beautifully. Please note that the Craft Cabinetry warranty does not cover product issues related to improper humidity or moisture control.

VII. TERM

The term of this Agreement shall be for a period of one year, commencing on the effective date herein. This Agreement shall be automatically renewed for successive terms of one year each unless either party shall give the other notice of non-renewal not less than 60 days prior to the end of the then current term or unless this Agreement is otherwise terminated as provided herein.

V. DELIVERY

Unless otherwise provided by applicable state law, either party may terminate this Agreement without cause and for any reason by giving 7 days written notice to the other party. Nothing contained herein shall prevent Company from immediately terminating this Agreement in the event of bankruptcy or insolvency of Dealer, or Dealer's failure to pay any amounts owed Company when due, or Dealer's failure to maintain satisfactory insurance with respect to Products. Upon termination for any reason, all amounts owed Company will become immediately due and payable.

IX. PERSONAL GUARANTY

The undersigned corporate officer, by affixing his signature below, hereby agrees to personally guarantee to the Company the unconditional and direct payment of any and all obligations of the Dealer to the Company and hereby agrees to bind himself to pay to the Company, upon demand, any sum which may become due as a result of nonpayment or default by the Dealer, whether or not the Company has exhausted its remedies against the Dealer. It is understood that this guarantee shall be an unconditional guaranty for such indebtedness of the Dealer and the undersigned waives notice of the acceptance of this Guaranty. In the event that legal action is commenced to enforce or recover the indebtedness under this Personal Guaranty, the undersigned agrees to pay all costs and expenses, including reasonable attorney's fees, with respect to such action.

X. TRADEMARKS/TRADE NAMES

Dealer is hereby licensed to use Company's name and trademarks in the normal course of distributing Company's Products and performing related services under this Agreement. Dealer agrees not to use Company's name as part of Dealer's name or in any manner which would misrepresent the relationship between Dealer and Company. Dealer may represent itself as an "authorized dealer" of Company, and, with prior approval of Company, may use Company's name and Product related trademarks on signs or other advertising or promotional material. Dealer's license to use Company's name and trademarks is limited and Dealer shall abide by restrictions and limitations imposed by Company from time to time. Upon termination of this Agreement, Dealer shall immediately cease representing itself as a dealer of

Company and shall cease use of all Company names and trademarks and any signs or other material, of whatever nature, identifying Dealer as a dealer of Company shall be removed or obliterated.

XI. GENERAL

A. Dealer is not an agent of Company nor is Dealer authorized to incur any obligations or make any representations on behalf of Company.

B. This Agreement is binding on the parties, their heirs, executors, administrators, and successors.

C. Dealer may not assign this Agreement or any provisions thereof to another dealer or party without the written approval of Company.

D. If any provision of this Agreement shall be held unenforceable, then the remainder of this Agreement shall not be affected thereby.

E. No waiver by Company of any default under this Agreement by Dealer shall be deemed a waiver of any prior or subsequent default by Dealer hereunder.

F. All understandings and agreements between the parties are contained in this Agreement which supersedes and terminates all other agreements between the parties. The rights of either party pertaining to Products sold by Company to Dealer under previous arrangements will be governed by this Agreement, provided, however, that nothing contained in this Agreement will, in any way, alter or change the rights and obligations of the parties pursuant to any security agreements or other agreements presently in existence.

G. Company reserves the right to modify and/or update this Agreement consistent with the modification and/or updating of all agreements Company has with other similar dealers, and replace or substitute such modified or updated agreement for this Agreement and such replacement or substitution shall not constitute termination of his Agreement. Failure of Dealer to execute such replacement or substitution agreement within 30 days of it being offered shall constitute automatic termination of this Agreement by Dealer.

H. Dealer agrees that application of any provision of this Agreement or related documents, or any other change implemented by Company, if equally applied to all other similar Company dealers, shall not constitute a change in the competitive circumstances of Dealer.

I. The Company reserves the right to deal directly with National accounts.

J. This Agreement will be governed by the laws of the State of Pennsylvania.

DEALER AGREEMENT

(267) 899-1888 | info@craftcabinetry.com

DEALER:

Dealer Name		
Company Address		
City	State	Zip
Telephone	Email	

DEALER'S AUTHORIZED PERSON'S SIGNATURE

By	Title
Signature (Print Name)	Date:

CRAFT CABINETRY

By	Title
Signature (Print Name)	Date:

DEALER PRODUCT & WARRANTY AWARENESS FORM

(267) 899-1888 | info@craftcabinetry.com

I have carefully read and understand the entire warranty as provided by Craft Cabinetry. and have been provided the opportunity to ask questions of, and receive answers from Craft Cabinetry concerning the terms and conditions set forth in the warranty, including, but not limited to the extent of the coverage therein.

I hereby accept full responsibility to (a) to truthfully and accurately represent Craft Cabinetry and (b) to make sure that anyone selling Craft cabinets under my dealership will properly explain the terms and conditions to the consumer.

I understand that Craft Cabinetry is not liable for any claims made by any consumer that are not covered under the warranty and that I will be solely responsible for any and all losses and expenses arising from such claims. I agree to indemnify, defend and hold Craft Cabinetry harmless from and against such losses and expenses, including, but not limited to, reasonable attorney's fees and expenses.

Dealer Information:

Printed Name		
Company Address		
City	State	Zip

Signature

Authorized Signature	Date:
Witness Printed Name	Witness Signature



ORDER PROCESS

NEW ACCOUNT

If you are a new account, the following must be on file before any orders can be processed:

- Signed Credit Card Authorization
- Signed Dealer Agreement
- Current Sales Tax Exemption Certificate*
- Signed Dealer Product & Awareness Form

NEW ORDER BY E-MAIL

We prefer that all orders be submitted online using CraftCabinetry.com portal but we also offer e-mail new order option:

- To submit a new order, please either fill out the Craft Order Form or submit a 20/20 PDF Quote (the quote should show our codes, descriptions, whether the order is assembled or RTA and the applicable door and color).
- Indicate whether you would like this order delivered or scheduled for pickup. If you would like the order delivered, please provide the delivery address and any special job-site conditions Craft or 3rd Party drivers should be aware of.
- To submit orders by email, send to orders@craftcabinetry.com.
- Please note: we do not accept orders over the phone.
- Craft Cabinetry will only accept orders from accounts in good standing: please reach out to our accounting department for questions about your payment terms and account status.

DISCLAIMER

Dealers Responsibility to Check & Confirm Orders:

- If you send our customer care team an order by email as per the process above, you will receive an order acknowledgment within 1-2 business days.
- Please take time to thoroughly check your confirmation to ensure that the color, door style, codes, shipment information, projected ship week and pricing are all accurate.
- Should your order require revisions, please email them to our customer service team who will subsequently send back a revised confirmation for final approval. Please be aware that any delays during the order process may affect the projected ship week.
- To finalize and immediately place your order into production, please sign the bottom of the order confirmation and send it back to our customer service department. You can also approve the order electronically by responding approved to the order email. By signing the order, you take full responsibility for any and all errors on the order form.
- If you are placing an order through our online order system, please carefully check the cabinet list within your quote before submitting your order. Orders submitted through the online portal will be dropped to production immediately and cannot be changed.
- Due to the custom nature of our cabinetry, we do not accept cancellations or modifications once an order has been finalized.
- 2-3 days prior to projected ship week found on the finalized order confirmation, our shipping department will contact you to schedule delivery.

If you have any questions or need help placing an order, please contact our Customer Service Team.

E-mail: sales@craftcabinetry.com

Phone: (267) 899-1888



CRAFT CABINETRY

PICKUP INFORMATION

At Craft Cabinetry, we aim to stand out from the competition by providing seamless and immediate pickups. Please review our pickup guidelines below to ensure a smooth experience when visiting our facility. Be sure to inform our customer service team of your preferred date and time for arrival. Additionally, we offer same-day pickups for parts and RTA orders, provided the order is paid for and confirmed.

Pickup Hours:

Monday-Friday between 8:00am-5:00pm

Showroom & Job-Site Deliveries:

1 week if the order is confirmed by Friday at 10am

LTL Deliveries: 1-2 business days

UPS Parts: 3-5 business days

CRAFT CABINETRY

PICKUP INFORMATION

Appointments: When submitting an order via email, our order form, a PDF report from 20/20, or through our order system, please specify that the order is for pick-up and include your requested date and time. Our customer service team will confirm your appointment through a confirmation email once your order is signed off. If we need to adjust the confirmed pick-up date and time, we will notify you prior to the scheduled arrival and provide a new date and time..

Payment: All pick-up orders must be paid before the pick-up date unless you have Craft credit. Please let our customer service know at the time of order. We will not release any products without a signed order confirmation and payment, or proof of your Creaft credit.

Pickups: Our goal is to ensure a smooth and expeditious pick-up experience so make sure to arrive on the date and time that was confirmed by our customer service team with your order number and paperwork. From time to time we reserve the right to ask you for identification when picking up. If you miss the date or time assigned, you may not be able to pick-up your products until a new appointment is made. If orders are not picked up or have to be stored for additional time, you may be charged for storage or restocking fees. Please refer to our delivery and pick-up policies in the specifications book for more information.

Loading: While you are expected to load your products yourself, we strive to provide superior service by assigning a dedicated team member to assist you with moving and loading cabinets when possible. The team member will check off each cabinet as it is loaded and provide you with a delivery note, which you must sign before leaving the premises.

Please note that Craft Cabinetry is not responsible for pick-ups that cannot be completed due to difficulties in loading your vehicle or for any damage to your vehicle that occurs while loading or parked on our premises. Once an order is scanned out of the warehouse on the day of pick-up, we will not accept any claims for missing items or cabinets.

Walk-ins: We do not accept walk-ins or add-on orders and reserve the right to refuse service. If you request same day service, you must contact us by phone.

CRAFT CABINETRY

EXCEPTIONAL LEAD TIMES

All Craft Cabinetry products feature the following exceptional lead times.

Pickup Orders	RTA products can normally be picked up on the same business day and assembled products within 2-3 business days.
Showroom or Job-site Deliveries	Assembled or RTA products that can ship on our company trucks will normally ship within one week from the date of the order if it is confirmed by Friday.
LTL Deliveries	LTL products sent by third party carriers normally ship within 3-5 days.
UPS Parts	Any products that can be sent by UPS will normally be shipped within 2-3 business days.

Please always refer to the projected ship week provided on your order confirmation as these lead times are approximate.

CRAFT CABINETRY

DELIVERY & STORAGE FEES

- We offer seamless and stress-free deliveries on our own trucks to the below zones. When a commercial location such as a showroom or third party shipper is requested, the delivery will be curbside.
- Deliveries outside of the above zones will require a custom quote and will normally be sent LTL: please inquire with sales for additional details.
- Orders that are not able to ship for two weeks or more beyond the confirmed ship week will incur a storage fee of $25.00 per day starting on the first day of the second week.
- Parts items may be shipped via common carrier and a damage disclaimer may need to be signed. Additional charges may apply.
- When a delivery can't be made due to dealer fault, the order will be returned and re-scheduled for delivery. In these cases, a second delivery charge will apply. Multiple deliveries for additional items needed for the same order will incur an automatic charge.

DELIVERY PROCESS

- One week prior to the Projected Ship Week indicated on your finalized order confirmation, we will call the phone number on record to schedule your delivery and provide a time frame. If a third-party shipper handles the delivery, we will inform you when the shipment is scheduled to arrive at their warehouse so you can make the necessary arrangements for the final delivery.

- On the day of delivery, the driver will call you one hour before arrival to provide an estimated time of arrival. When the order arrives at your dock or job site, please note any visible damage on the driver's delivery form.

CONCEALED DAMAGES & MISSING PRODUCT

- At the time of delivery, please check the packing list for accuracy and inspect for damages. Craft Cabinetry is not responsible for missing items unless reported at delivery. Once signed for, the order is your responsibility.

- Report any missing or damaged items to the driver and our customer service team immediately. Claims must include pictures and a documented claim form, and must be made before installation. We do not accept claims for concealed damages or missing items one week after delivery or pickup.

- Note any damages on the delivery receipt or bill of lading when signing. Minor damages to non-exposed cabinet ends that do not affect structural integrity will not be replaced.

RETURN/CANCELLATION

- All products sold must be signed for by the purchaser, who then takes responsibility for payment. Due to the custom nature of our business, we do not accept returns, changes, or cancellations once an order has been signed off and confirmed by the dealer.

- As Craft Cabinetry does not inventory pre-built cabinets, please ensure that confirmed orders are complete and accurate before finalizing.

REPLACEMENT PARTS PROCESS

- If you receive damaged items, please follow these steps to resolve the issue efficiently.

- Immediate Action: Take pictures of the damaged part and packaging as soon as possible. If the damage is visible before unloading, take pictures while the item is still in the truck.

- Notify Customer Service: Email the photos and a detailed description of the damage to Craft customer service department at orders@craftcabinetry.com.

- Submit Replacement Form: Email the replacement form, including the order number, door style, finish, and the items needed for replacement. This information is crucial for processing your request and for future preventative measures.

- Retain Damaged Product: Do not use, destroy, or discard the damaged product. If we or the freight carrier wishes to retrieve the damaged item, you will be contacted within one week of reporting the damage.

- Please note, we do not accept claims for hidden or concealed damages after 5 days from the delivery date or once our products have been installed.

CRAFT CABINETRY
5 YEAR
LIMITED WARRANTY

FIVE (5) YEAR LIMTED WARRANTY

Craft Cabinetry warrants to the original purchaser that all our products will be free from defects in material and workmanship under normal residential use for five years from the date of purchase. This limited warranty is subject to the following limitations and exclusions:

Eligibility: This warranty applies only to the original residential cabinet purchaser and is nontransferable.

Coverage: This warranty is valid for residential use only and does not apply to commercial properties, rental properties, or any other non-residential properties.

Geographic Limit: This warranty is applicable only within the United States.

For full details on limitations and exclusions, please refer to our complete warranty document.

EXCLUSIONS

As with all natural materials, wood is influenced by environmental factors such as natural and artificial lighting, smoke, and age. Darkening or mellowing is a natural process for wood as it ages, and each wood species exhibits its own distinctive grain patterns and characteristics, adding to its natural beauty. These variations in color, grain, and other naturally occurring characteristics are not considered imperfections or defects. This warranty does not cover natural aging and darkening of the wood color, nor does it apply to the inherent growth characteristics of wood.

- **Finish Variation** - All wood varies in color from piece to piece due to natural differences in tone and grain patterns, especially in woods and veneers like White Oak. These minor variations in color, grain, or uniformity are inherent to natural wood and enhance the beauty and character of the finish. While Craft Cabinetry takes extra steps to select each piece of wood to highlight its natural beauty, we cannot guarantee that every component will exactly match others. These natural variations in finish are not considered defects and are not covered by our limited warranty.
- **Pitch Pockets & Mineral Streaks** - In certain species of wood, pitch pockets and mineral

streaks are prevalent. This is particularly true of the beautiful lumber used in producing some Craft Cabinetry products. These naturally occurring features are not considered to be defects and are not covered by our limited warranty.

- **Hairline Cracks** - Environmental factors influence the performance of wood products. Due to its cellular structure, all wood absorbs and releases moisture. In periods of high humidity, wood will "grow," and during dry periods, wood will "shrink." Over time, this moisture exchange may cause visible hairline cracks, typically in the joinery of wood components. These minor cracks are not considered defects and are not covered by our limited warranty.
- **Warping** - Warping occurs in wood when the absorption and release of moisture creates "stress" in the wood. In many instances, this condition will resolve itself after the cabinetry in your home goes through a heating and cooling cycle. Warping of components is allowed up to one quarter inch (1/4") and is not considered a defect covered by this limited warranty.
- **Fingerprints** - Fingerprints can occur on wood products, especially darker painted finishes, due to oil and residue left on the human hand. Fingerprints are normal and are sometimes found on products that receive heavy usage or were not installed with hardware on doors, drawers or other accessories. Fingerprints on our finishes and products are expected to occur with normal usage and are not considered a defect covered by this limited warranty.
- **Household Cleaners** - Certain household cleaners and other substances, whether acidic, basic or neutral, may affect the color and integrity of the Product's finish over time. Any such effects on the color and/or integrity of the finish are not covered by this limited warranty. Please contact your authorized dealer for care and cleaning instructions.

LIMITATIONS OF LIABILITY

- This warranty applies only to normal indoor consumer use. Product used for commercial or outdoor use is excluded. Not covered under this warranty are cabinets showing normal wear and tear; cabinets that were not stored or installed properly, improperly assembled or disassembled, intentionally damaged, misused, or exposed to elements; cabinets that have defects due to excessive moisture, accidents or negligence; and cabinets that have been changed or modified in any way.
- This warranty is expressly limited to the repair or replacement of the defective component

parts at our discretion. Our liability is expressly limited to the cost of material for the repair or replacement of defective goods. We may elect to repair or replace the product with a product of equal or lesser value and complementary style if the original style is no longer available. Due to the aging process of natural wood, Craft Cabinetry can't guarantee an exact match between the finish of the existing product and the replacement product.

- In no event is Craft Cabinetry liable for incidental, indirect, or consequential damages resulting from the use of our cabinets. This warranty does not cover the cost of assembly, installation, removal, subsequent damage or transportation of the defective product or replacement.
- When a claim for warpage/joint separation/wood growth is submitted, Craft Cabinetry may, at its sole option and after inspection, defer action for 12 months to allow the Product to acclimate to the installed environment.
- Some states do not allow limitations on how long an implied warranty may last or the exclusion and or limitations of incidentals and/or consequential damages. Therefore the above limitations may not apply.
- This warranty shows specific rights that may vary from state to state. Any claims made under this warranty must be presented in writing with a dated sales invoice accompanied by photographs of defective material.
- The remedies put forth above are your sole and exclusive remedies and outline Craft Cabinetry's entire liability for any breach of this limited warranty.
- No other implied warranties apply.
- This limited warranty is effective for product manufactured by Craft Cabinetry on or after January 1st, 2024.

MAKING A WARRANTY CLAIM

Please contact the dealer from whom you purchased the product for warranty assistance. If you are unable to contact your authorized dealer, you may contact our customer service.

PENNSYLVANIA OFFICE:

Location: 5660 Rising Sun Ave, Philadelphia, PA 19120

E-mail: info@craftcabinetry.com **Office:** (267) 899-1888

CRAFT CABINETRY
DEALER
PRODUCT CATALOG

	SKU	WIDTH	HEIGHT	DEPTH	Pure White Modern Gray	Navy Midnight Pure White Recessed	Rift Oak Stain Gray	Aqua Shaker
30"H Wall Cabinet								
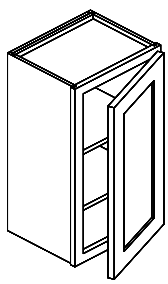	W0930	9"	30"	12"	$187.10	$209.56	$217.05	N/A
	W1230	12"	30"	12"	$220.50	$246.96	$255.78	N/A
	W1530	15"	30"	12"	$233.85	$261.91	$271.27	N/A
	W1830	18"	30"	12"	$247.23	$276.90	$286.79	N/A
	W2130	21"	30"	12"	$300.69	$336.77	$348.80	N/A
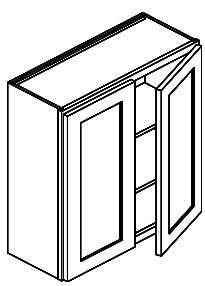	W2430	24"	30"	12"	$334.09	$374.17	$387.53	N/A
	W2730	27"	30"	12"	$350.81	$392.92	$406.95	N/A
	W3030	30"	30"	12"	$367.49	$411.60	$426.30	N/A
	W3330	33"	30"	12"	$417.61	$467.71	$484.42	N/A
	W3630	36"	30"	12"	$451.02	$505.14	$523.18	N/A
36"H Wall Cabinet								
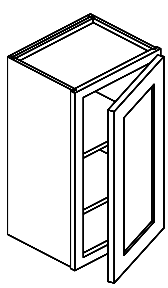	W0936	9"	36"	12"	$210.49	$235.74	$244.16	N/A
	W1236	12"	36"	12"	$233.85	$261.91	$271.27	N/A
	W1536	15"	36"	12"	$250.57	$280.63	$290.65	N/A
	W1836	18"	36"	12"	$290.65	$325.52	$337.14	N/A
	W2136	21"	36"	12"	$344.10	$385.39	$399.16	N/A
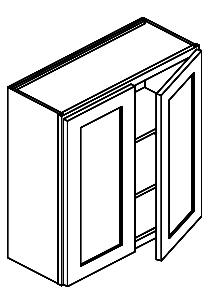	W2436	24"	36"	12"	$377.54	$422.86	$437.96	N/A
	W2736	27"	36"	12"	$400.90	$449.00	$465.03	N/A
	W3036	30"	36"	12"	$427.63	$478.93	$496.04	N/A
	W3336	33"	36"	12"	$459.39	$514.52	$532.89	N/A
	W3636	36"	36"	12"	$497.80	$557.52	$577.44	N/A

	SKU	WIDTH	HEIGHT	DEPTH	Pure White Modern Gray	Navy Midnight Pure White Recessed	Rift Oak Stain Gray	Aqua Shaker
42"H Wall Cabinet								
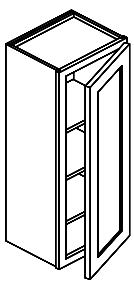	W0942	9"	42"	12"	$263.92	$295.58	$306.14	N/A
	W1242	12"	42"	12"	$283.97	$318.06	$329.42	N/A
	W1542	15"	42"	12"	$314.04	$351.72	$364.29	N/A
	W1842	18"	42"	12"	$347.44	$389.12	$403.02	N/A
	W2142	21"	42"	12"	$400.90	$449.00	$465.03	N/A
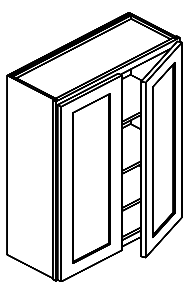	W2442	24"	42"	12"	$451.02	$505.14	$523.18	N/A
	W2742	27"	42"	12"	$494.46	$553.80	$573.57	N/A
	W3042	30"	42"	12"	$507.81	$568.75	$589.06	N/A
	W3342	33"	42"	12"	$547.92	$613.67	$635.59	N/A
	W3642	36"	42"	12"	$580.80	$650.50	$673.73	N/A
12"H Wall Cabinet								
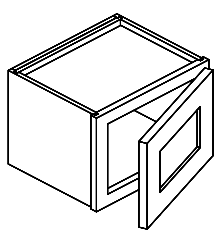	W1212	12"	12"	12"	$173.04	$193.80	$200.73	N/A
	W1512	15"	12"	12"	$191.93	$214.97	$222.65	N/A
	W1812	18"	12"	12"	$206.82	$231.64	$239.91	N/A
	W2112	21"	12"	12"	$223.50	$250.32	$259.26	N/A
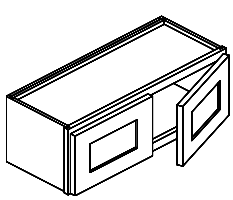	W2412	24"	12"	12"	$239.39	$268.13	$277.70	N/A
	W2712	27"	12"	12"	$257.31	$288.19	$298.48	N/A
	W3012	30"	12"	12"	$223.83	$250.69	$259.64	N/A
	W3312	33"	12"	12"	$237.21	$265.68	$275.16	N/A
	W3612	36"	12"	12"	$257.25	$288.12	$298.41	N/A

	SKU	WIDTH	HEIGHT	DEPTH	Pure White Modern Gray	Navy Midnight Pure White Recessed	Rift Oak Stain Gray	Aqua Shaker
15"H Wall Cabinet								
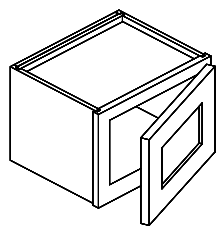	W1215	12"	15"	12"	$191.94	$214.97	$222.65	N/A
	W1515	15"	15"	12"	$209.58	$234.73	$243.11	N/A
	W1815	18"	15"	12"	$227.49	$254.79	$263.89	N/A
	W2115	21"	15"	12"	$245.24	$274.68	$284.49	N/A
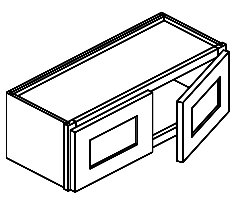	W2415	24"	15"	12"	$263.25	$294.84	$305.37	N/A
	W2715	27"	15"	12"	$280.98	$314.70	$325.94	N/A
	W3015	30"	15"	12"	$240.57	$269.44	$279.06	N/A
	W3315	33"	15"	12"	$257.25	$288.12	$298.41	N/A
	W3615	36"	15"	12"	$267.27	$299.34	$310.03	N/A
18"H Wall Cabinet								
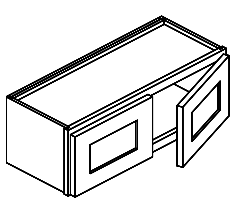	W2418	24"	18"	12"	$248.35	$278.14	$288.07	N/A
	W3018	30"	18"	12"	$250.57	$280.63	$290.65	N/A
	W3318	33"	18"	12"	$273.97	$306.84	$317.79	N/A
	W3618	36"	18"	12"	$283.97	$318.06	$329.42	N/A
24"H Wall Cabinet								
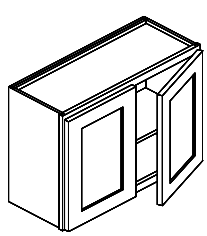	W2424	24"	24"	12"	$280.99	$314.70	$325.94	N/A
	W3024	30"	24"	12"	$287.31	$321.79	$333.28	N/A
	W3324	33"	24"	12"	$307.36	$344.23	$356.53	N/A
	W3624	36"	24"	12"	$317.37	$355.45	$368.15	N/A

craft cabinetry

	SKU	WIDTH	HEIGHT	DEPTH	Pure White Modern Gray	Navy Midnight Pure White Recessed	Rift Oak Stain Gray	Aqua Shaker
24"H Refrigerator Wall Cabinet								
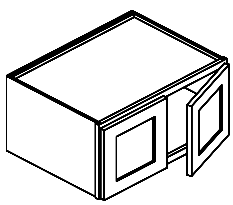	W301224	30"	12"	24"	$332.19	$372.05	$385.34	N/A
	W331224	33"	12"	24"	$300.69	$336.77	$348.80	N/A
	W361224	36"	12"	24"	$334.09	$374.17	$387.53	N/A
	W301524	30"	15"	24"	$335.19	$375.41	$388.82	N/A
	W361524	36"	15"	24"	$370.83	$415.33	$430.16	N/A
	W301824	30"	18"	24"	$368.37	$412.57	$427.31	N/A
	W331824	33"	18"	24"	$334.09	$374.17	$387.53	N/A
	W361824	36"	18"	24"	$404.26	$452.76	$468.93	N/A
	W302424	30"	24"	24"	$386.85	$433.27	$448.75	N/A
	W332424	33"	24"	24"	$387.55	$434.04	$449.55	N/A
	W362424	36"	24"	24"	$457.69	$512.60	$530.91	N/A
Diagonal Corner Cabinet								
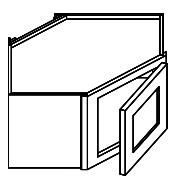	WDC2412	24"	12"	12"	$403.33	$451.72	$467.85	N/A
	WDC2415	24"	15"	12"	$413.26	$462.84	$479.37	N/A
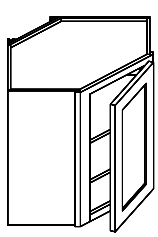	WDC2430	24"	30"	12"	$464.40	$520.13	$538.70	N/A
	WDC2436	24"	36"	12"	$521.19	$583.73	$604.58	N/A
	WDC2442	24"	42"	12"	$611.39	$684.77	$709.22	N/A

	SKU	WIDTH	HEIGHT	DEPTH	Pure White Modern Gray	Navy Midnight Pure White Recessed	Rift Oak Stain Gray	Aqua Shaker
Wall Angle Corner Cabinet								
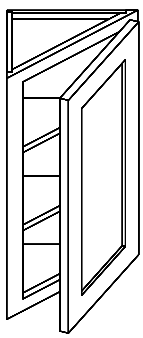	WAC1230	12"	30"	12"	$384.21	$430.32	$445.68	N/A
	WAC1236	12"	36"	12"	$461.06	$516.40	$534.84	N/A
	WAC1242	12"	42"	12"	$534.54	$598.68	$620.07	N/A
Wall End Shelf Cabinet								
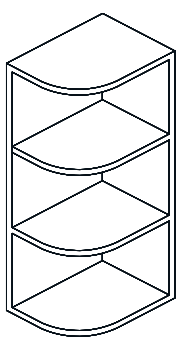	WES0930	9"	30"	12"	$190.44	$213.29	$220.91	N/A
	WES0936	9"	36"	12"	$230.51	$258.18	$267.40	N/A
	WES0942	9"	42"	12"	$275.63	$308.72	$319.74	N/A
Wall Cabinet With Drawers								
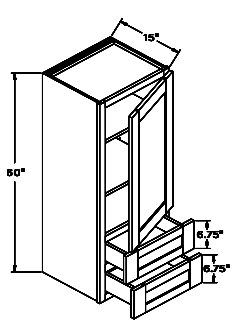	WD184815	18"	48"	15"	$795.70	$875.27	$923.01	N/A
	WD185415	18"	54"	15"	$875.27	$962.80	$1015.31	N/A
	WD186015	18"	60"	15"	$962.80	$1059.08	$1116.84	N/A

Blind Wall Corner Cabinet

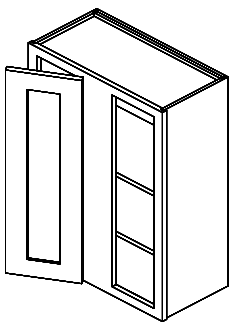

SKU	WIDTH	HEIGHT	DEPTH	Pure White Modern Gray	Navy Midnight Pure White Recessed	Rift Oak Stain Gray	Aqua Shaker
BW2430	24"	30"	12"	$270.93	$303.44	$314.28	N/A
BW2436	24"	36"	12"	$309.63	$346.79	$359.17	N/A
BW2442	24"	42"	12"	$367.68	$411.80	$426.51	N/A

Dimensions & Specifications

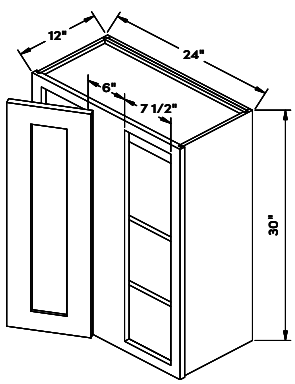

BW2430

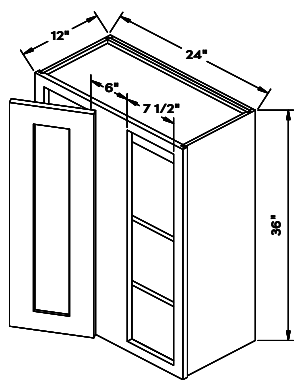

BW2436

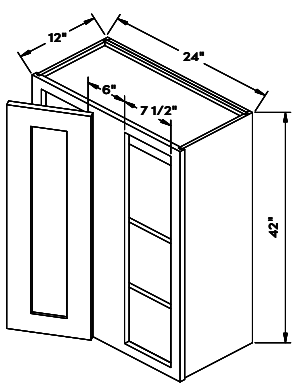

BW2442

	SKU	WIDTH	HEIGHT	DEPTH	Pure White Modern Gray	Navy Midnight Pure White Recessed	Rift Oak Stain Gray	Aqua Shaker
Microwave Wall Cabinets								
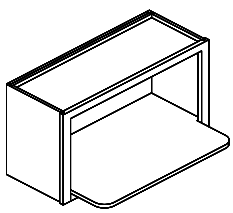	WMS3018	30"	18"	12"	$280.63	$314.29	$325.52	N/A
Appliance Wall Cabinet with Pull-Up Door								
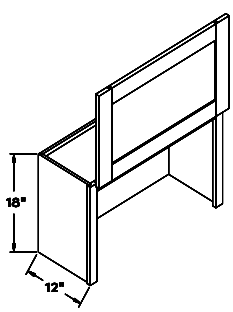	WAG3018	30"	18"	12"	$536.26	$589.89	$622.06	N/A
Wine Rack Cabinets								
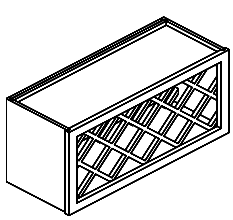	WWR3015	30"	15"	12"	$280.63	$314.29	$325.52	N/A
	WWR3018	30"	18"	12"	$299.00	$333.21	$345.24	N/A

	SKU	WIDTH	HEIGHT	DEPTH	Pure White Modern Gray	Navy Midnight Pure White Recessed	Rift Oak Stain Gray	Aqua Shaker
Base Cabinets								
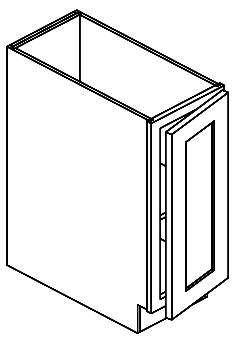	B09	9"	34.5"	24"	$275.01	$308.01	$319.01	$308.01
Available Upgrade for B09 Base Cabinet								
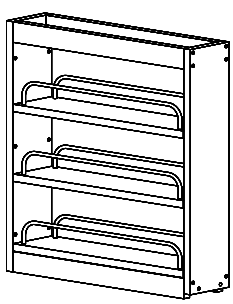	BFP09	5"	24"	21"	$218.17	$218.17	$218.17	$218.17
Full Height Door Base Cabinet								
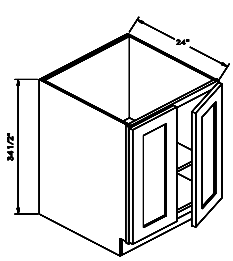	BFH24	24"	34.5"	24”	$471.15	$527.69	$546.54	N/A
	BFH30	30"	34.5"	24”	$564.66	$632.42	$655.01	N/A

craft cabinetry

	SKU	WIDTH	HEIGHT	DEPTH	Pure White Modern Gray	Navy Midnight Pure White Recessed	Rift Oak Stain Gray	Aqua Shaker
Base Cabinets								
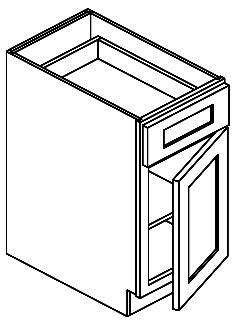	B12	12"	34.5"	24"	$360.82	$404.11	$418.54	$404.11
	B15	15"	34.5"	24"	$400.90	$449.00	$465.03	$449.00
	B18	18"	34.5"	24"	$420.95	$471.48	$488.31	$471.48
	B21	21"	34.5"	24"	$467.73	$523.86	$542.57	$523.86
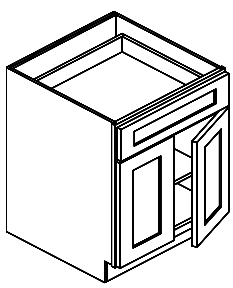	B24	24"	34.5"	24"	$501.14	$561.29	$581.33	$561.29
	B27	27"	34.5"	24"	$537.88	$602.41	$623.93	$602.41
	B30	30"	34.5"	24"	$594.67	$666.02	$689.81	$666.02
	B33	33"	34.5"	24"	$664.84	$744.61	$771.20	$744.61
	B36	36"	34.5"	24"	$698.25	$782.04	$809.97	$782.04
Drawer Base Cabinets								
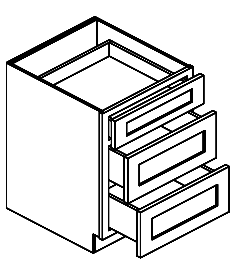	DB12	12"	34.5"	24"	$527.86	$591.19	$612.31	$591.19
	DB15	15"	34.5"	24"	$571.31	$639.88	$662.73	$639.88
	DB18	18"	34.5"	24"	$611.39	$684.77	$709.22	$684.77
	DB21	21"	34.5"	24"	$658.17	$737.15	$763.48	$737.15
	DB24	24"	34.5"	24"	$698.25	$782.04	$809.97	$782.04
	DB30	30"	34.5"	24"	$795.15	$890.57	$922.37	$890.57
	DB36	36"	34.5"	24"	$928.76	$1040.22	$1077.37	$1040.22

	SKU	WIDTH	HEIGHT	DEPTH	Pure White Modern Gray	Navy Midnight Pure White Recessed	Rift Oak Stain Gray	Aqua Shaker
Drawer Base Cabinets (2 Drawers)								
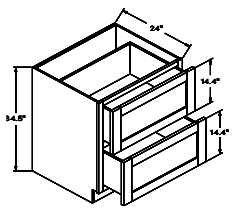	DB24-2	24"	34.5"	24"	$668.25	$735.08	$775.17	$735.08
	DB30-2	30"	34.5"	24"	$765.15	$841.67	$887.57	$841.67
Sink Base Cabinets								
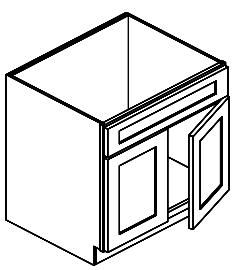	SB24	24"	34.5"	24"	$400.90	$449.00	$465.03	$449.00
	SB27	27"	34.5"	24"	$437.67	$490.19	$507.70	$490.19
	SB30	30"	34.5"	24"	$467.73	$523.86	$542.57	$523.86
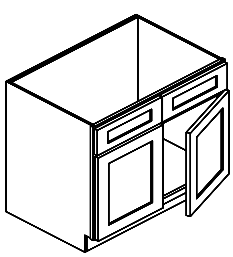	SB33	33"	34.5"	24"	$507.81	$568.75	$589.06	$568.75
	SB36	36"	34.5"	24"	$527.86	$591.19	$612.31	$591.19
Diagonal Corner Sink Base Cabinets								
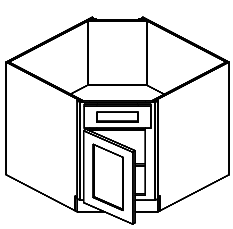	DSB36	36"	34.5"	24"	$581.32	$651.07	$674.32	$651.07

SKU	WIDTH	HEIGHT	DEPTH	Pure White Modern Gray	Navy Midnight Pure White Recessed	Rift Oak Stain Gray	Aqua Shaker
Sink Base Cabinets							
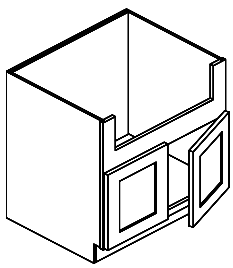							
FSB30	30"	34.5"	24"	$430.44	$482.09	$499.31	$482.09
FSB33	33"	34.5"	24"	$454.11	$508.60	$526.77	$508.60
FSB36	36"	34.5"	24"	$484.11	$542.20	$561.57	$542.20

Dimensions & Specifications

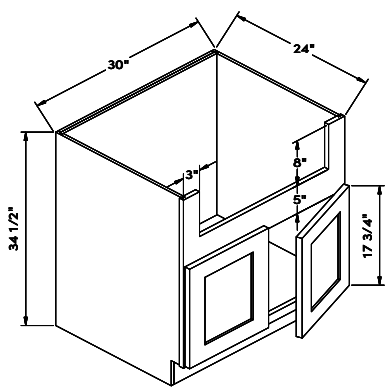

FSB30

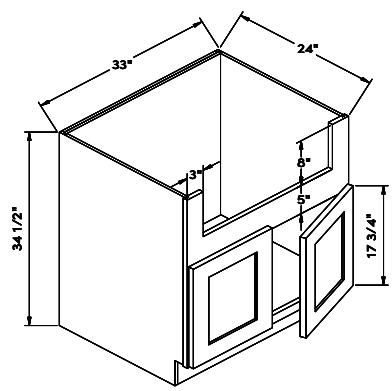

FSB33

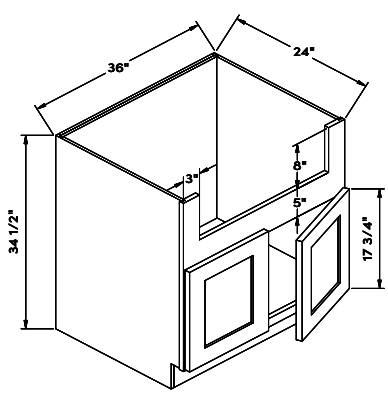

FSB36

Corner Base Cabinets

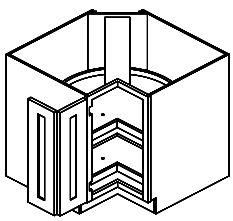

SKU	WIDTH	HEIGHT	DEPTH	Pure White Modern Gray	Navy Midnight Pure White Recessed	Rift Oak Stain Gray	Aqua Shaker
BLS33	33"	34.5"	24"	$788.44	$883.04	$914.58	$883.04
BLS36	36"	34.5"	24"	$851.94	$954.17	$988.25	$954.17

Blind Corner Base Cabinets

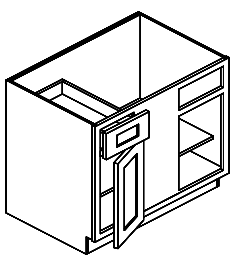

BBC39	39"	34.5"	24"	$601.38	$673.55	$697.60	$673.55
BBC42	42"	34.5"	24"	$626.44	$701.60	$726.66	$701.60

Dimensions & Specifications

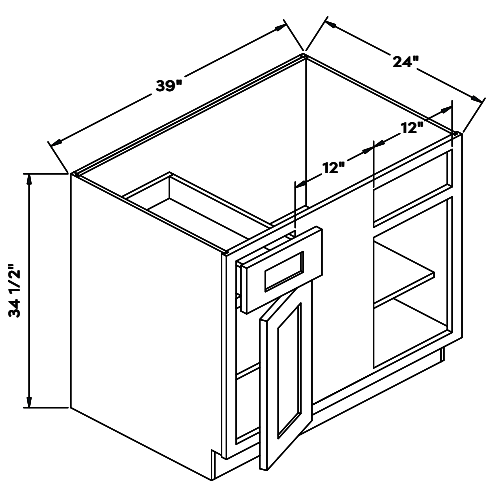

BBC39

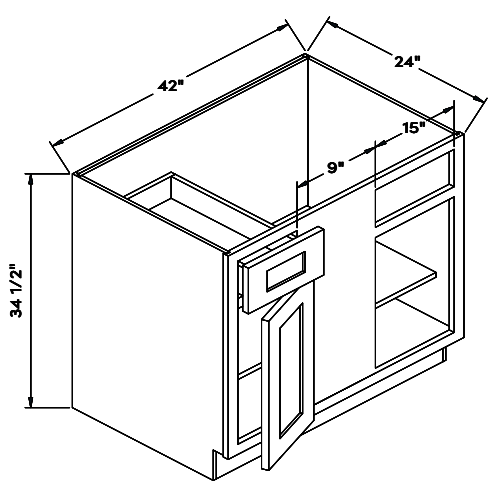

BBC42

	SKU	WIDTH	HEIGHT	DEPTH	Pure White Modern Gray	Navy Midnight Pure White Recessed	Rift Oak Stain Gray	Aqua Shaker
Base End Cabinets								
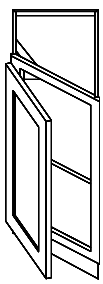	BAC12-L	12"	34.5"	24"	$461.06	$516.40	$534.84	$516.40
	BAC12-R	12"	34.5"	24"	$461.06	$516.40	$534.84	$516.40
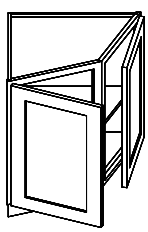	BEC24	24"	34.5"	24"	$619.48	$693.81	$718.59	$693.81
Base End Shelf Cabinets								
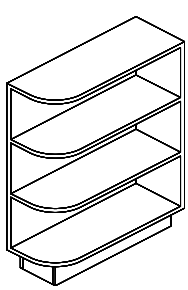	BES09	9"	34.5"	24"	$387.02	$433.47	$448.95	$433.47
Microwave Base Cabinets								
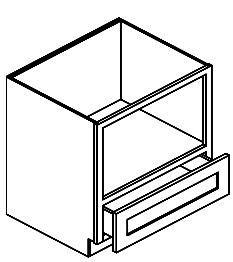	BMC30	30"	34.5"	24"	$528.79	$592.23	$613.38	$592.23

Microwave Opening: 27"W x 18"H
Drawer Front Height: 9 3/4"H

craft cabinetry

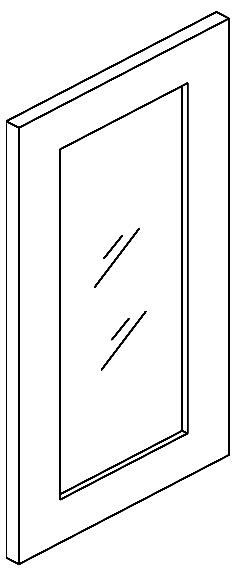

Glass Door Cabinet Upgrades

SKU	WIDTH	HEIGHT	DEPTH	Pure White Modern Gray	Navy Midnight Pure White Recessed	Rift Oak Stain Gray	Aqua Shaker
W1530GD	14.5"	29"	3/4"	$132.84	$148.78	$154.09	N/A
W1536GD	14.5"	35"	3/4"	$159.66	$178.82	$185.21	N/A
W1542GD	14.5"	41"	3/4"	$187.75	$210.27	$217.78	N/A
W1830GD	17.5"	29"	3/4"	$159.66	$178.82	$185.21	N/A
W1836GD	17.5"	35"	3/4"	$192.88	$216.01	$223.73	N/A
W1842GD	17.5"	41"	3/4"	$226.10	$253.24	$262.29	N/A
W2430GD	11.7"	29"	3/4"	$185.01	$207.21	$214.61	N/A
W2436GD	11.7"	35"	3/4"	$224.25	$251.16	$260.13	N/A
W2442GD	11.7"	41"	3/4"	$264.66	$296.42	$307.01	N/A
W3030GD	14.7"	29"	3/4"	$241.35	$270.31	$279.97	N/A
W3036GD	14.7"	35"	3/4"	$288.69	$323.33	$334.88	N/A
W3042GD	14.7"	41"	3/4"	$359.37	$402.49	$416.87	N/A
W3630GD	17.7"	29"	3/4"	$278.52	$311.94	$323.08	N/A
W3636GD	17.7"	35"	3/4"	$338.58	$379.21	$392.75	N/A
W3642GD	17.7"	41"	3/4"	$398.61	$446.44	$462.39	N/A
WDC2412GD	15"	11”	3/4"	$111.29	$124.66	$129.11	N/A
WDC2415GD	15"	14”	3/4"	$114.31	$128.02	$132.59	N/A
WDC2430GD	15"	29"	3/4"	$132.84	$148.78	$154.09	N/A
WDC2436GD	15"	35"	3/4"	$159.66	$178.82	$185.21	N/A
WDC2442GD	15"	41"	3/4"	$187.75	$210.27	$217.78	N/A

Pantry Cabinets

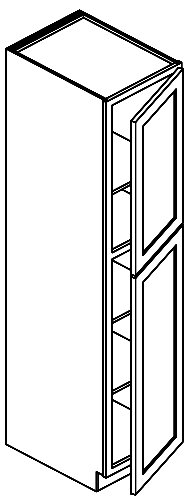

SKU	WIDTH	HEIGHT	DEPTH	Pure White Modern Gray	Navy Midnight Pure White Recessed	Rift Oak Stain Gray	Aqua Shaker
PC1884	18"	84"	24"	$1085.80	$1216.08	$1259.52	$1216.08
PC1890	18"	90"	24"	$1109.19	$1242.30	$1286.66	$1242.30
PC1896	18"	96"	24"	$1302.96	$1459.32	$1511.43	$1459.32

Dimensions & Specifications

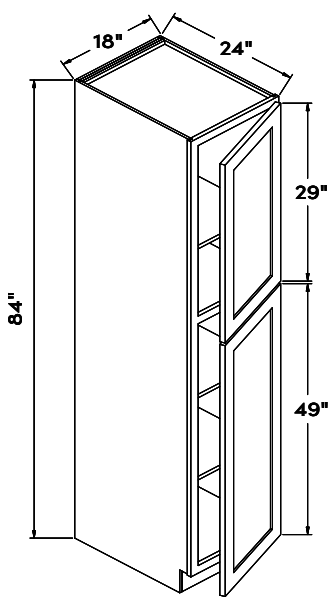

PC1884

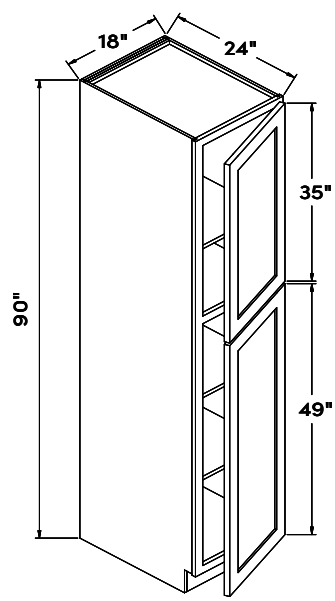

PC1890

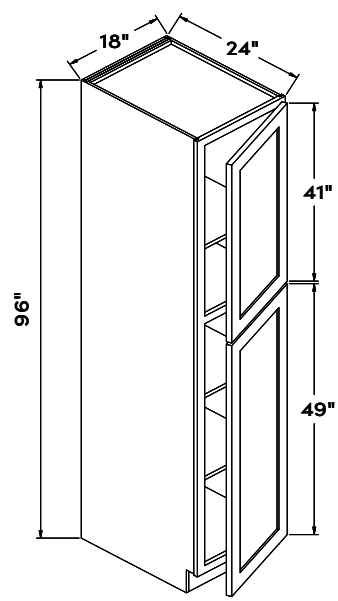

PC1896

SKU	WIDTH	HEIGHT	DEPTH	Pure White Modern Gray	Navy Midnight Pure White Recessed	Rift Oak Stain Gray	Aqua Shaker
Pantry Cabinets							
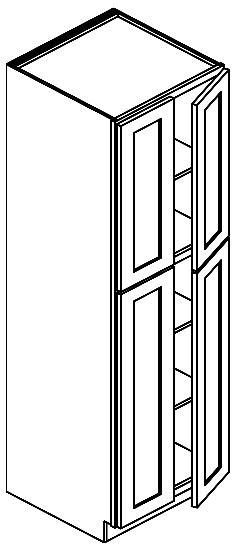							
PC2484	24"	84"	24"	$1323.01	$1481.76	$1534.68	$1481.76
PC2490	24"	90"	24"	$1349.71	$1511.67	$1565.65	$1511.67
PC2496	24"	96"	24"	$1603.65	$1796.10	$1860.23	$1796.10
PC3084	30"	84"	24"	$1587.61	$1746.37	$1841.63	$1746.37
PC3090	30"	90"	24"	$1619.65	$1781.62	$1878.80	$1781.62
PC3096	30"	96"	24"	$1924.38	$2116.82	$2232.28	$2116.82

Dimensions & Specifications

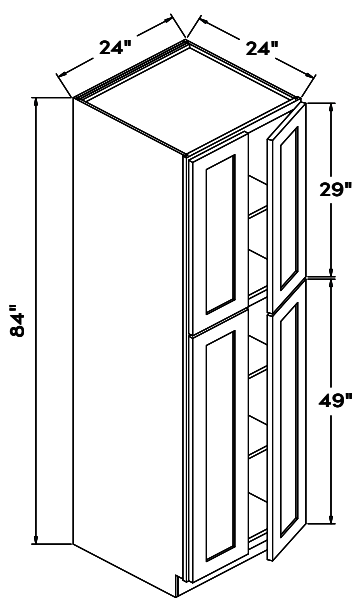

PC2484 & PC3084

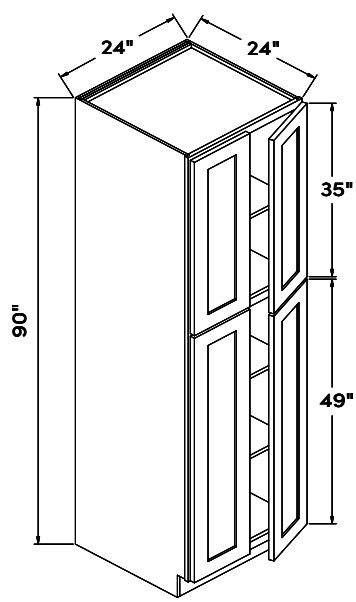

PC2490 & PC3090

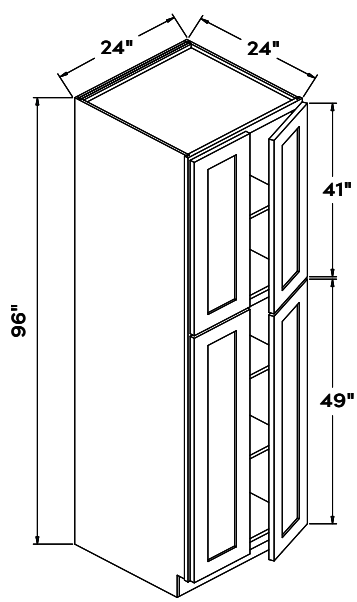

PC2496 & PC3096

craft cabinetry

Oven Cabinets

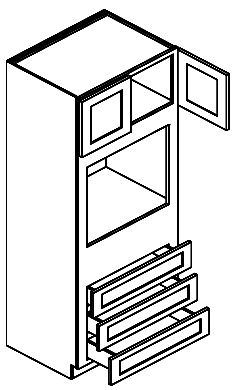

SKU	WIDTH	HEIGHT	DEPTH	Pure White Modern Gray	Navy Midnight Pure White Recessed	Rift Oak Stain Gray	Aqua Shaker
OC338424D	33"	84"	24"	$1677.10	$1878.34	$1945.42	$1878.34
OC339024D	33"	90"	24"	$1760.13	$1971.35	$2041.75	$1971.35
OC339624D	33"	96"	24"	$1884.00	$2110.08	$2185.44	$2110.08

Dimensions & Specifications

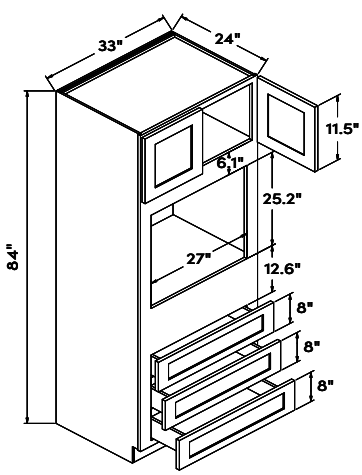

OC338424D

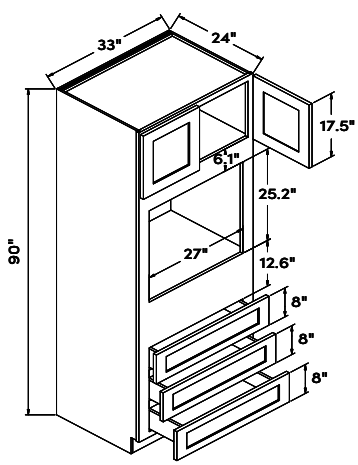

OC339024D

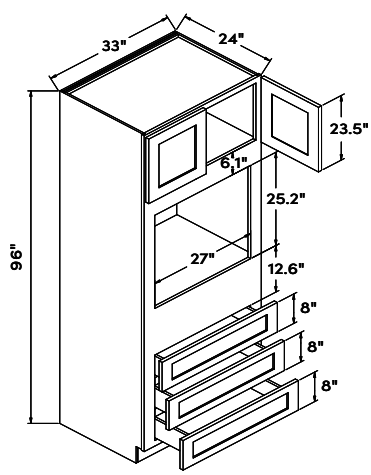

OC339624D

	SKU	WIDTH	HEIGHT	DEPTH	Pure White Modern Gray	Navy Midnight Pure White Recessed	Rift Oak Stain Gray	Aqua Shaker
Vanity Base Cabinet								
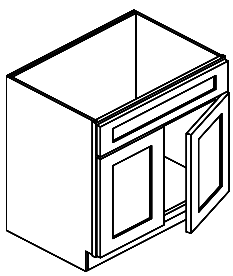	V2421	24"	34 1/2"	21"	$354.78	$397.35	$411.54	$397.35
	V3021	30"	34 1/2"	21"	$420.57	$471.04	$487.86	$471.04
Drawer Base Cabinet								
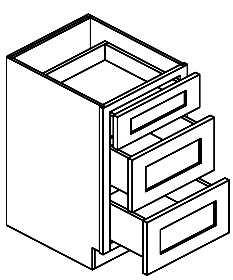	VDB12	12"	34 1/2"	21"	$516.03	$577.95	$598.59	$577.95
	VDB15	15"	34 1/2"	21"	$570.21	$638.64	$661.44	$638.64
	VDB18	18"	34 1/2"	21"	$624.39	$699.32	$724.29	$699.32

	SKU	WIDTH	HEIGHT	DEPTH	Pure White Modern Gray	Navy Midnight Pure White Recessed	Rift Oak Stain Gray	Aqua Shaker
30" Vanity Drawer Base Cabinet								
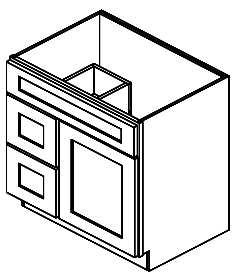	VSDL3021	30"	34 1/2"	21"	$732.75	$820.68	$849.99	$820.68
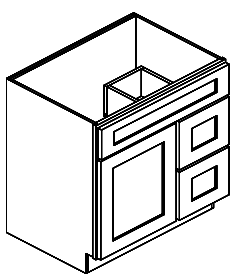	VSDR3021	30"	34 1/2"	21"	$732.75	$820.68	$849.99	$820.68
36" Vanity Drawer Base Cabinet								
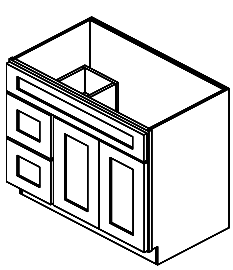	VSDL3621	36"	34 1/2"	21"	$824.34	$923.26	$956.23	$923.26
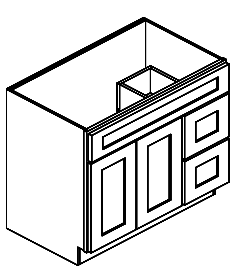	VSDR3621	36"	34 1/2"	21"	$824.34	$923.26	$956.23	$923.26

	SKU	WIDTH	HEIGHT	DEPTH	Pure White Modern Gray	Navy Midnight Pure White Recessed	Rift Oak Stain Gray	Aqua Shaker
Accessories								
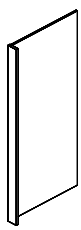	REP9624-F3	3"	96"	24"	$228.63	$256.07	$265.21	N/A
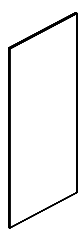	REP9630	30"	96"	3/4"	$279.74	$313.32	$324.51	N/A
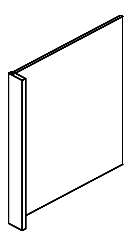	DWP3-F3	24"	34.5"	3/4"	$112.41	$125.90	$130.40	$125.90
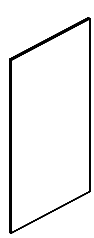	BP4896	96"	48"	1/4"	$254.18	$284.69	$294.86	$284.69
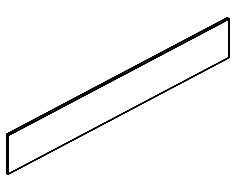	TK8	96"	4.5"	1/4"	$31.92	$35.75	$37.03	$35.75

craft cabinetry

	SKU	WIDTH	HEIGHT	DEPTH	Pure White Modern Gray	Navy Midnight Pure White Recessed	Rift Oak Stain Gray	Aqua Shaker
Wall Cabinet Fillers								
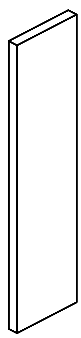	WF330	3"	30"	3/4"	$40.88	$45.80	$47.43	N/A
	WF336	3"	36"	3/4"	$42.80	$47.95	$49.66	N/A
	WF342	3"	42"	3/4"	$44.71	$50.06	$51.85	N/A
	WF630	6"	30"	3/4"	$63.87	$71.53	$74.09	N/A
	WF636	6"	36"	3/4"	$74.72	$83.70	$86.69	N/A
	WF642	6"	42"	3/4"	$85.59	$95.86	$99.28	N/A
Base Cabinet Fillers								
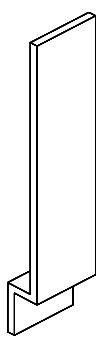	BF3	3"	34.5"	3/4"	$44.71	$50.06	$51.85	$50.06
	BF6	6"	34.5"	3/4"	$85.59	$95.86	$99.28	$95.86
Tall Cabinet Fillers								
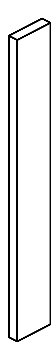	TF396	3"	96"	3/4"	$104.75	$117.33	$121.52	$117.33
	TF696	6"	96"	3/4"	$152.00	$170.25	$176.33	$170.25

	SKU	WIDTH	HEIGHT	DEPTH	Pure White Modern Gray	Navy Midnight Pure White Recessed	Rift Oak Stain Gray	Aqua Shaker
Moldings								
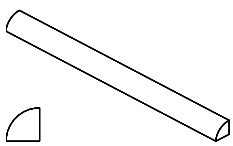	Quarter Round Molding							
	QR8	3/4"	96"	3/4"	$39.00	$43.68	$45.24	$43.68
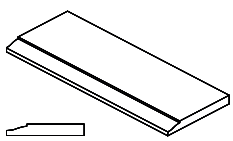	Base Board Molding							
	BBM8	96"	4 1/2"	5/8"	$160.46	$179.73	$186.15	$179.73

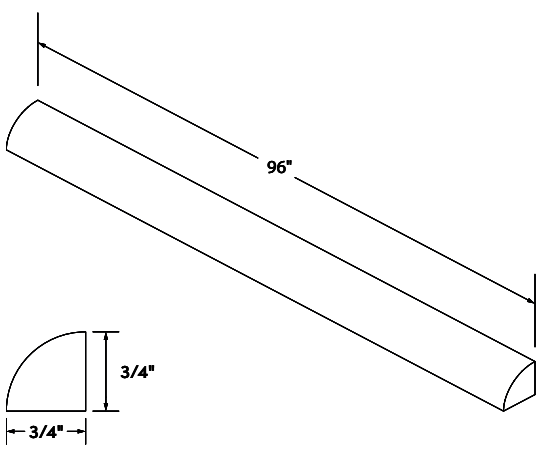

QR8 | Quarter Round Molding

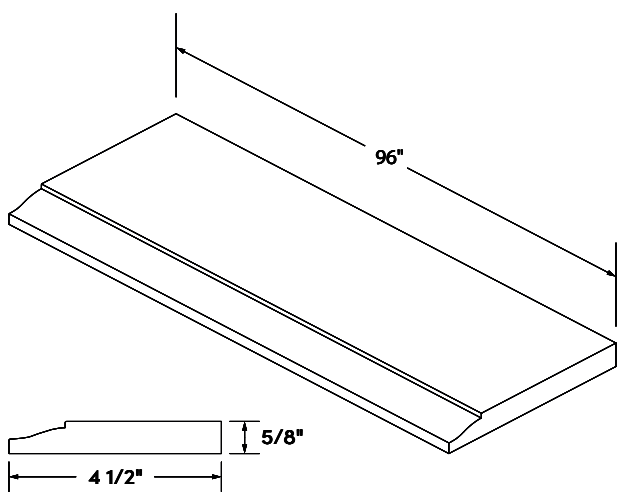

BBM8 | Base Board Molding

	SKU	WIDTH	HEIGHT	DEPTH	Pure White Modern Gray	Navy Midnight Pure White Recessed	Rift Oak Stain Gray	Aqua Shaker
Moldings								
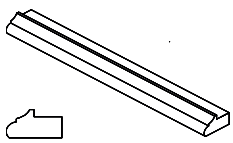	Light Rail Rounded Molding							
	LRM8	96"	1 1/2"	1 3/4"	$149.07	$166.96	$172.92	N/A

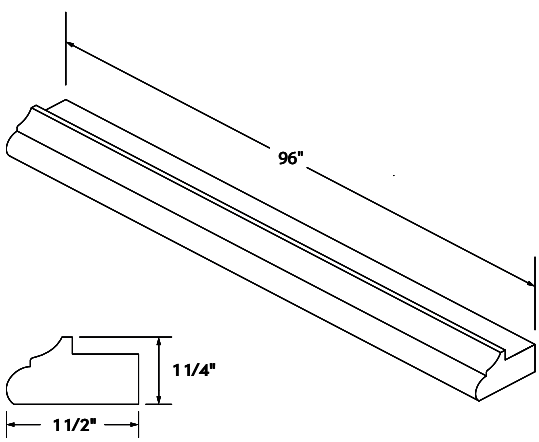

LRM8 | Light Rail Rounded Molding

	SKU	WIDTH	HEIGHT	DEPTH	Pure White Modern Gray	Navy Midnight Pure White Recessed	Rift Oak Stain Gray	Aqua Shaker
Moldings								
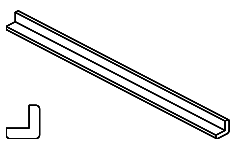					Outside Corner Molding			
	OCM8	96"	3/4"	3/4"	$52.38	$58.67	$60.76	$58.67
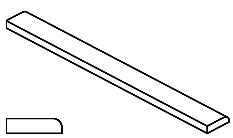					Scribe Molding			
	SM8	96"	3/4"	1/4"	$31.92	$35.75	$37.03	$35.75

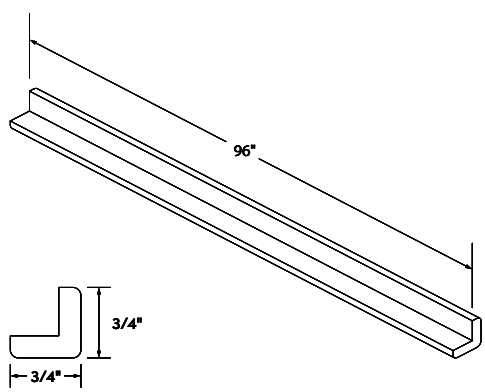

OCM8 | Outside Corner Molding

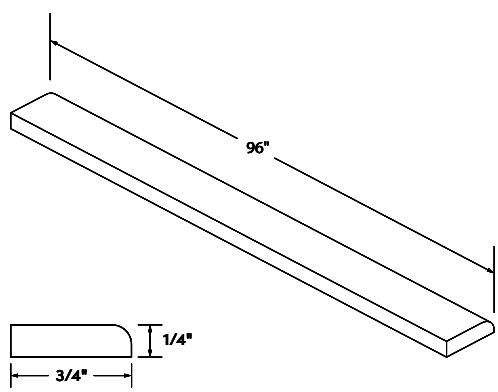

SM8 | Scribe Molding

	SKU	WIDTH	HEIGHT	DEPTH	Pure White Modern Gray	Navy Midnight Pure White Recessed	Rift Oak Stain Gray	Aqua Shaker
Moldings								
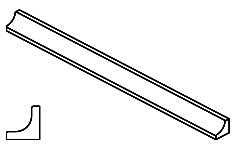	Inside Corner Molding							
	ICM8	96"	3/4"	1/4"	$94.17	$105.47	$109.24	$105.47
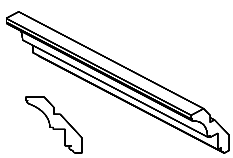	Crown Molding							
	LCM8	96"	4 1/4"	3/4"	$221.94	$248.57	$257.45	N/A

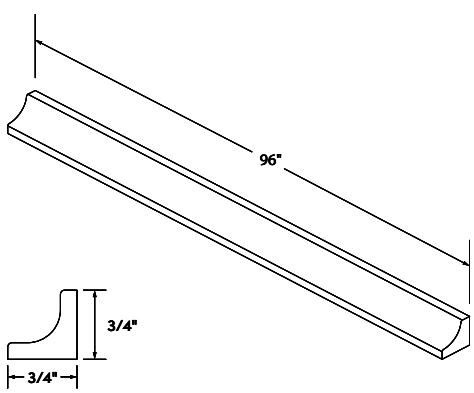

ICM8 | Inside Corner Molding

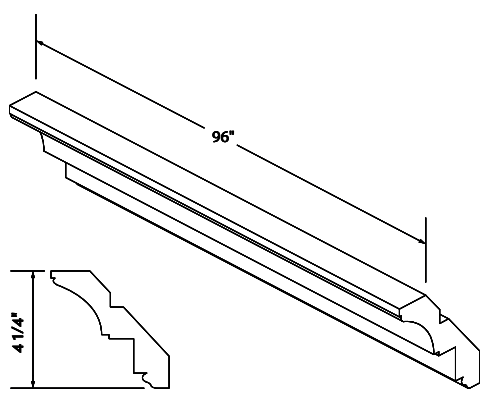

LCM8 | Crown Molding

	SKU	WIDTH	HEIGHT	DEPTH	Pure White Modern Gray	Navy Midnight Pure White Recessed	Rift Oak Stain Gray	Aqua Shaker
Moldings								
					Crown Molding			
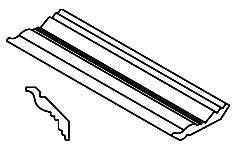	CMPL96	96"	4 1/4"	3/4"	$174.99	$195.99	$202.99	N/A
					Crown Molding			
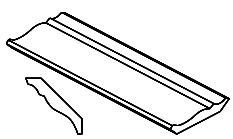	CMF96	96"	4 1/4"	3/4"	$206.94	$231.77	$240.05	N/A

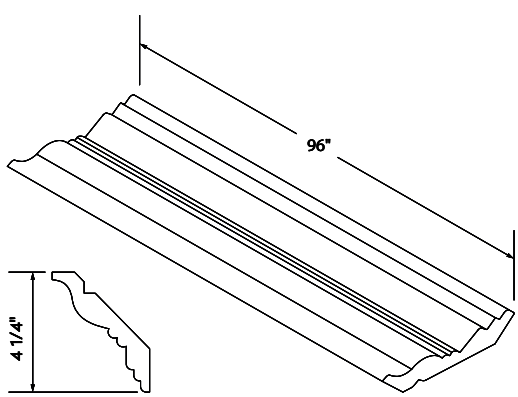

CMPL96 | Crown Molding

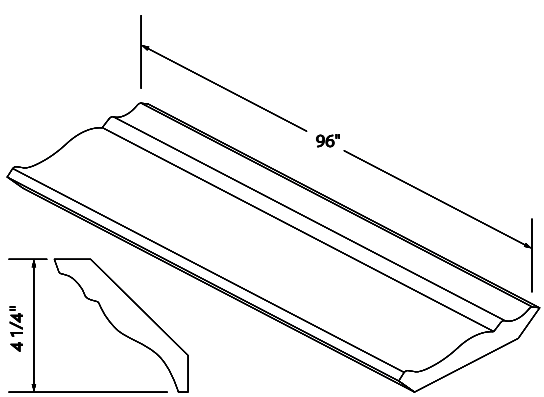

CMF96 | Crown Molding

	SKU	WIDTH	HEIGHT	DEPTH	Pure White Modern Gray	Navy Midnight Pure White Recessed	Rift Oak Stain Gray	Aqua Shaker
Moldings								
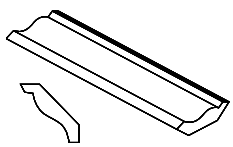	CMP96	96"	2 1/4"	3/4"	$97.50	$109.20	$113.10	N/A
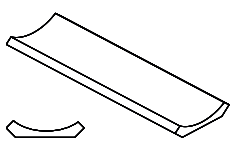	CMC96	96"	3 3/4"	3/4"	$114.96	$128.76	$133.35	N/A

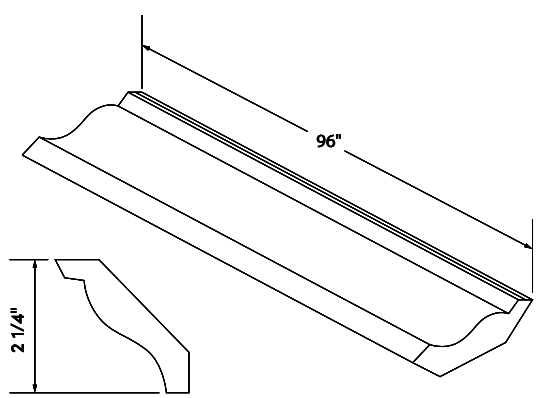

CMP96 | Crown Molding

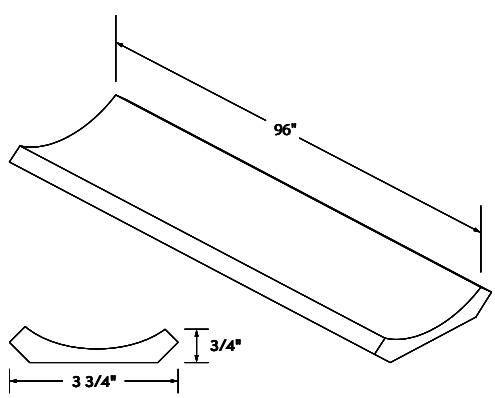

CMC96 | Crown Molding

	SKU	WIDTH	HEIGHT	DEPTH	Pure White Modern Gray	Navy Midnight Pure White Recessed	Rift Oak Stain Gray	Aqua Shaker
Valance Moldings								
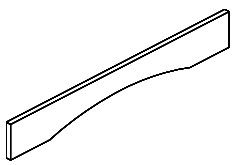	V31D	31"	6"	3/4"	$76.63	$85.81	$88.88	N/A
	V37D	37"	6"	3/4"	$91.96	$102.98	$106.66	N/A
	V43D	43"	6"	3/4"	$107.28	$120.15	$124.44	N/A
	V49D	49"	6"	3/4"	$114.95	$128.76	$133.35	N/A
	V60D	60"	6"	3/4"	$166.06	$185.98	$192.62	N/A
Arched Moldings								
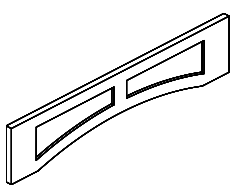	AV3612	36"	12"	3/4"	$166.06	$185.98	$192.62	N/A
	AV4212	42"	12"	3/4"	$181.38	$203.15	$210.40	N/A
	AV4812	48"	12"	3/4"	$250.35	$280.39	$290.41	N/A
	AV5412	54"	12"	3/4"	$310.39	$347.63	$360.04	N/A
	AV6012	60"	12"	3/4"	$370.43	$414.89	$429.71	N/A
Corbel & Pole (Table Post) Moldings								
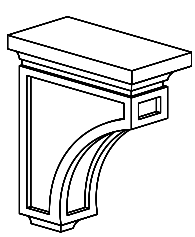	CORBEL RE6	9"	6"	3"	$263.29	$294.87	$305.40	N/A
	TP3	3"	34.5"	3"	$263.29	$294.87	$305.40	$294.87

Range Hood Wood Covers

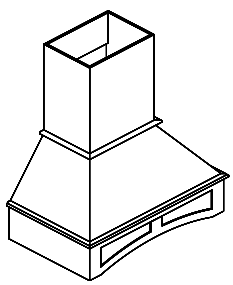

SKU	WIDTH	HEIGHT	DEPTH	Pure White Modern Gray	Navy Midnight Pure White Recessed	Rift Oak Stain Gray	Aqua Shaker
ANGEL HOOD 30	31.5"	45.7"	19.7"	$864.39	$968.12	$1002.69	N/A
ANGEL HOOD 36	37.5"	45.7"	19.7"	$918.72	$1028.97	$1065.72	N/A

Range Hood Wood Covers

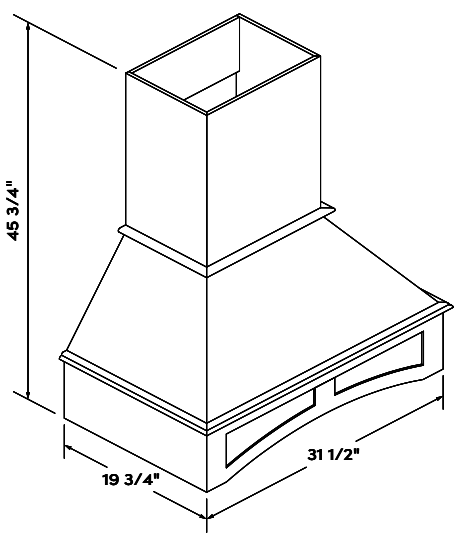

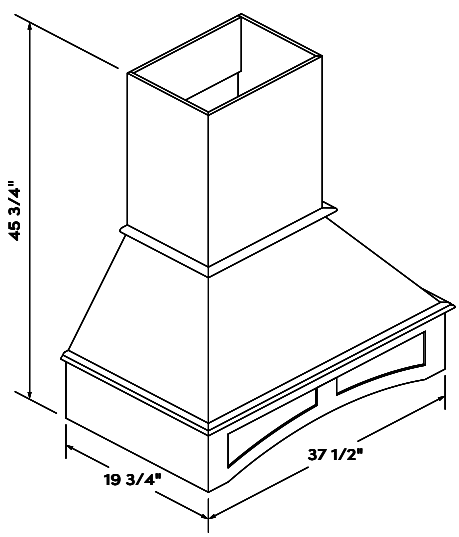

Floating Shelves

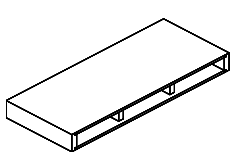

FLOATING SHELF 24	24"	2.5"	10"	$123.84	$123.84	$133.98	N/A
FLOATING SHELF 30	30"	2.5"	10"	$139.39	$139.39	$150.78	N/A
FLOATING SHELF 36	36"	2.5"	10"	$156.67	$156.67	$169.44	N/A
FLOATING SHELF 42	42"	2.5"	10"	$175.68	$175.68	$190.08	N/A

	SKU	WIDTH	HEIGHT	DEPTH	Pure White Modern Gray	Navy Midnight Pure White Recessed	Rift Oak Stain Gray	Aqua Shaker
Stemware Rack								
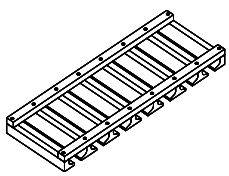	GH30	28.5"	2"	10.25"	$104.76	$115.24	$121.52	N/A
Vanity Knee Drawer								
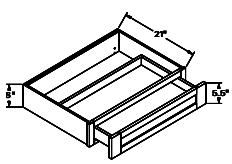	DSK3021-6	30"	6"	21"	$355.68	$391.25	$412.59	$391.25

	SKU	WIDTH	HEIGHT	DEPTH	Pure White Modern Gray	Navy Midnight Pure White Recessed	Rift Oak Stain Gray	Aqua Shaker
Roll-Out Trays								
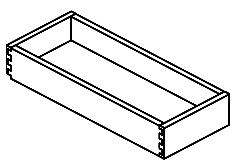	ROT15	11.22"	4.13"	21"	$114.95	$114.95	$114.95	$114.95
	ROT18	14.21"	4.13"	21"	$121.35	$121.35	$121.35	$121.35
	ROT21	17.20"	4.13"	21"	$127.74	$127.74	$127.74	$127.74
	ROT24	20.24"	4.13"	21"	$135.39	$135.39	$135.39	$135.39
	ROT27	23.23"	4.13"	21"	$142.41	$142.41	$142.41	$142.41
	ROT30	26.22"	4.13"	21"	$149.43	$149.43	$149.43	$149.43
	ROT33	29.21"	4.13"	21"	$155.82	$155.82	$155.82	$155.82
	ROT36	32.20"	4.13"	21"	$164.76	$164.76	$164.76	$164.76
Spice Pull Out 9" Base Cabinet Upgrade								
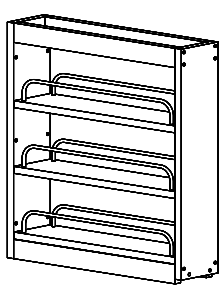	BFP09	5"	24"	21"	$166.86	$166.86	$166.86	$166.86
Trash Can Holders								
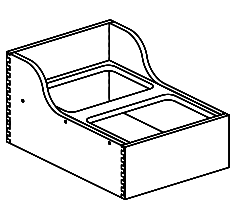	TC18	14.6"	12"	21"	$251.62	$251.62	$251.62	$251.62

	SKU	WIDTH	HEIGHT	DEPTH	Pure White Modern Gray	Navy Midnight Pure White Recessed	Rift Oak Stain Gray	Aqua Shaker
Pots & Pans Organizer Roll-Out								
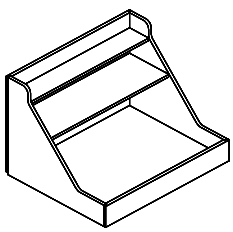	PPOROT30	26"	19"	21"	$462.00	$462.00	$462.00	$462.00
	PPOROT36	32"	19"	21"	$511.00	$511.00	$511.00	$511.00
Dish Storage Organizer								
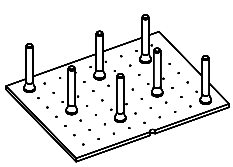	4DPS-30	25"	6"	19.75"	$268.10	$268.10	$268.10	$268.10
Drawer Insert Kit								
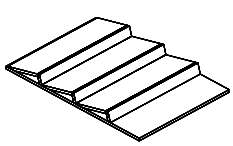	STI20	19.25"	1.75"	19.75"	$124.74	$124.74	$124.74	$124.74

	SKU	WIDTH	HEIGHT	DEPTH	Pure White Modern Gray	Navy Midnight Pure White Recessed	Rift Oak Stain Gray	Aqua Shaker
Knife Block Kit								
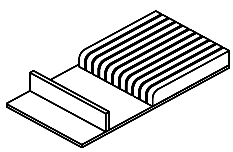	B18KS	13.15"	2.12"	19.7"	$182.00	$182.00	$182.00	$182.00
	B24KS	19.12"	2.12"	19.7"	$235.20	$235.20	$235.20	$235.20
2-Tiered Drawer Kit								
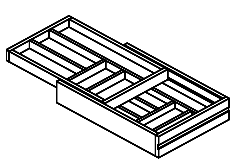	4WTCD-18	14.5"	4"	21"	$310.80	$310.80	$310.80	$310.80
	4WTCD-24	20.5"	4"	21"	$382.20	$382.20	$382.20	$382.20

Glass Doors

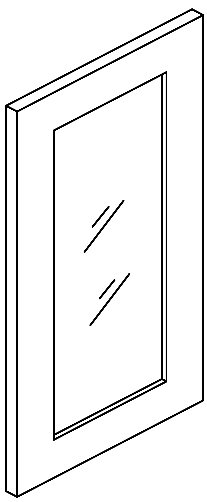

SKU	WIDTH	HEIGHT	DEPTH	Pure White Modern Gray	Navy Midnight Pure White Recessed	Rift Oak Stain Gray	Aqua Shaker
GD1212	11.5"	11"	3/4"	$94.53	$105.87	$109.65	N/A
GD1215	11.5"	14"	3/4"	$97.45	$109.13	$113.03	N/A
GD1512	14.5"	11"	3/4"	$111.29	$124.66	$129.11	N/A
GD1515	14.5"	14"	3/4"	$114.31	$128.02	$132.59	N/A
GD1812	17.5"	11"	3/4"	$128.06	$143.44	$148.56	N/A
GD1815	17.5"	14"	3/4"	$131.16	$146.90	$152.15	N/A
GD2112	20.5"	11"	3/4"	$144.83	$162.22	$168.01	N/A
GD2115	20.5"	14"	3/4"	$155.11	$173.71	$179.92	N/A
GD2412	11.7"	11"	3/4"	$161.59	$180.97	$187.43	N/A
GD2415	11.7"	14"	3/4"	$179.06	$200.56	$207.72	N/A
GD2712	13.2"	11"	3/4"	$178.35	$199.75	$206.89	N/A
GD2715	13.2"	14"	3/4"	$191.49	$214.49	$222.13	N/A
GD3012	14.7"	11"	3/4"	$192.12	$215.17	$222.86	N/A
GD3015	14.7"	14"	3/4"	$203.90	$228.38	$236.54	N/A
GD3312	16.2"	11"	3/4"	$211.89	$237.32	$245.79	N/A
GD3315	16.2"	14"	3/4"	$216.33	$242.29	$250.94	N/A
GD3612	17.7"	11"	3/4"	$219.88	$246.25	$255.05	N/A
GD3615	17.7"	14"	3/4"	$228.65	$256.10	$265.25	N/A

	SKU	WIDTH	HEIGHT	DEPTH	Pure White Modern Gray	Navy Midnight Pure White Recessed	Rift Oak Stain Gray	Aqua Shaker
Base Decorative Dummy Doors								
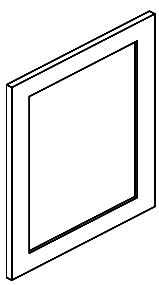	BDD24	23.5"	29.30"	3/4"	$183.92	$206.00	$213.36	$206.00
Wall Decorative Dummy Doors								
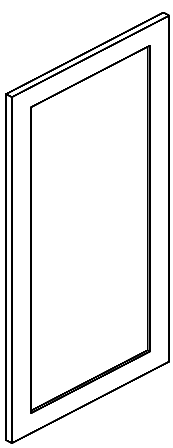	WDD1212	11.5"	11"	3/4"	$107.21	$120.09	$124.38	N/A
	WDD1215	11.5"	14"	3/4"	$115.19	$129.02	$133.63	N/A
	WDD1230	11.5"	29"	3/4"	$88.13	$98.72	$102.24	N/A
	WDD1236	11.5"	35"	3/4"	$107.28	$120.15	$124.44	N/A
	WDD1242	11.5"	41"	3/4"	$123.91	$138.77	$143.72	N/A
Pantry Decorative Doors								
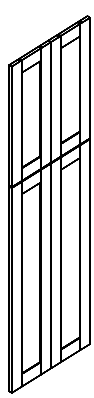	TDD2484	24"	84"	3/4"	$476.00	$523.60	$552.16	$523.60
	TDD2490	24"	90"	3/4"	$525.00	$577.50	$609.00	$577.50
	TDD2496	24"	96"	3/4"	$574.00	$631.40	$665.84	$631.40

	SKU	WIDTH	HEIGHT	DEPTH	Pure White Modern Gray	Navy Midnight Pure White Recessed	Rift Oak Stain Gray	Aqua Shaker
Door Samples								
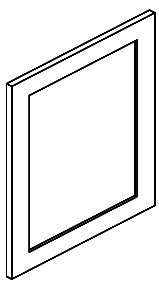	Sample	11"	14"	3/4"	$58.74	$65.79	$68.14	$65.79

craft cabinetry

DESIGNED BY

WebUnite